SPECIFICATION P-140:82

SUSPENSION STRINGS

PAKISTAN
WATER AND POWER DEVELOPMENT AUTHORITY
(DESIGN DEPARTMENT POWER)

C O N T E N T S

PRINTING HISTORY

First approved on. 21.7.80

First revision on December, 1982.

SPECIFICATION P-140: 82

SUSPENSION STRINGS

0 FOREWORD

0.1 This standard has been introduced by WAPDA and has been prepared by the Transmission Line Section of the office of the Chief Engineer (Design).

0.2 This standard is intended only for the purpose of technical specification to facilitate procurement of materials and does not include provision of contract.

0.3 This specification is subject to periodic revision as and when required.

1 SCOPE

1.1 This specification covers the hardware of suspension strings for transmission lines.

2 TYPES OF SUSPENSION STRINGS

2.1 Suspension string described in this specification are of the following types:

Description	String Designation	Cond:O.D. (mm)
a) Single Suspension string for "DOG"	SS-D	14.2
b) Single Suspension string for "LYNX"	SS-L	19.5
c) Single Suspension string for "CUCKOO"	SS-C	27.7
d) Single Suspension string for "RAIL"	SS-R	29.6
e) Single Suspension string for "CARDINAL"	SS-CA	30.4
f) Double Suspension string for "DOG"	DS-D	14.2
g) Double Suspension string for "LYNX"	DS-L	19.5
h) Double Suspension string for "CUCKOO"	DS-C	27.7
i) Double Suspension string for "RAIL"	DS-R	29.6
j) Double Suspension string for "CARDINAL"	DS-CA	30.4

The hardware used in the suspension string described above in this specification has been designated by the code numbers. These codes have been assigned in the following manner:

i) The first letter 'S' stands for single and 'D' for Double.

ii) The next letter 'S' stands for Suspension.

iii) The succeeding letters stand for the name of conductor for which the hardware is meant for i.e. 'D' for Dog 'L' for Lynx, 'C' for Cuckoo, 'R' for Rail and 'CA' for Cardinal.

3 RATINGS OF HARDWARE

3.1 The hardware shall be of the ratings as specified in Table-I and Table-II below:

TABLE - I

RATINGS OF HARDWARE FOR SINGLE SUSPENSION STRING

Sr. No.	Description	Failing Load Kg.				
		SS-D	SS-L	SS-C	SS-R	SS-CA
1.	Ball hook	8000	8000	12000	12000	16000
2.	Socket eye	8000	8000	12000	12000	16000
3.	Arcing Horn	150	150	150	150	150
4.	Suspension Clamp:					
	i) Resistance to Conductor slippage	600	1500	2500	2500	3350
	ii) Vertically applied load	8000	8000	12000	12000	16000

TABLE - II

RATINGS OF HARDWARE FOR DOUBLE SUSPENSION STRING

Sr. No.	Description	Failing Load Kg.				
		DS-D	DS-L	DS-C	DS-R	DS-CA
1.	Ball Hook	12000	12000	20,000	20,000	25,000
2.	Socket Clevis Type A	12000	12000	20,000	20,000	25,000
3.	Yoke Plates	12000	12000	20,000	20,000	25,000
4.	Ball Clevis	8000	8000	12,000	12,000	16,000
5.	Socket Clevis Type B	8000	8000	12,000	12,000	16,000

Sr. No.	Description	Failing Load Kg. DS-D	DS-L	DS-C	DS-R	DS-CA
6.	Arcing Horn Bottom	150	150	150	150	150
7.	Eye Clevis	12000	12000	20,000	20,000	25,000
8.	Suspension Clamp:					
	i) Resistance to Conductor slippage	600	1500	2,500	2,500	3,350
	ii) Vertically applied load	8000	8000	12,000	12,000	16,000

4 GENERAL REQUIREMENTS

4.1 Each single suspension string hardware shall consist of:

1 Self locking ball hook
1 Socket eye
1 Arcing horn bottom
1 Non magnetic suspension clamp

4.2 Each double suspension string hardware shall consist of:

1 Self locking ball hook
1 Socket clevis type 'A'
2 Yoke plates
2 Ball clevis
2 Socket clevis type 'B'
1 Arcing horn
1 Eye clevis
1 Suspension clamp

4.3 The ball and socket shall be of size IEC, 16mmA, and shall conform to WAPDA Specification P-8:82 (latest revision).

4.4 All ferrous parts shall be hot dip galvanized in accordance with WAPDA Specification P-82:81 (latest revision).

4.5 The parts of hardware that mate with each other shall not have a play clearance of more than 2mm.

5 DIMENSIONS AND TOLERANCES

All hardware shall generally be in accordance with drawings forming a part of this Specification.

The dimensions of these parts of hardware that mate with other hardware or that determine the length of insulator string are binding and are shown enclosed on the drawing.

For dimensions that are fixed and binding the tolerance

will be plus or minus 2 percent with a maximum of 0.8mm. For dimensions that are shown as Max. or Min. there shall be no plus and minus tolerance respectively. The tolerance in the opposite sense may however be 4%.

6 DESIGN AND MATERIAL

6.1 Self Locking Ball Hook

It shall be made from drop forged steel of suitable grade and shall be hot dip galvanized. The detail dimensions shall be according to Drawing No. PDW/DF-315.

6.2 Socket Eye

It shall be made from drop forged steel or malleable iron of suitable grade. It shall be hot dip galvanised. The detail dimension shall be according to Dwg. No. PDW/DF-316. It shall be supplied with a split pin made from half round brass wire protected against corrosion by appropriate coating and shall be able to work under hot line conditions.

6.3 Socket Clevis

These shall be made from drop forged steel or malleable iron of suitable grade. These shall be hot dip galvanized and shall be made according to Dwg. No. PDW/DF-376 and PDW/DF-378. The socket shall be supplied with a split pin made from half round brass wire protected against corrosion by an appropriate coating and shall be able to work under hot line conditions. The clevis shall be supplied with rivet round headed with aluminium alloy round washer and straight split pin. The split pin shall be made from cadmium plated brass or copper.

6.4 Yoke Plates

Yoke plates shall be of mono block or flat type and shall be made from high grade steel, hot dip galvanized and subject to normalizing process and shall be made according to Drawing No. PDW/DF-377.

6.5 Ball Clevis

It shall be made from drop forged steel of suitable grade and shall be hot dip galvanized. It shall be made according to Dwg. No. PDW/DF-382.

6.6 Arcing Horn

It shall be made from drop forged mild steel and shall be hot dip galvanized. The dimensions shall be according to

Drawing No. PDW.DF-317. The tolerance on the length shall be 5% with a maximum of 15mm.

6.7 Eye Clevis

It shall be made from drop forged steel of suitable grade and shall be hot dip galvanized. The detail dimensions shall be according to Dwg. No. PDW/DF-379. The clevis shall be supplied with rivet round headed with aluminium alloy round washer and straight split pin. The split pin shall be made from cadmium plated brass or copper.

The eye shall be supplied with a split pin made from half round brass wire protected against corrosion by an appropriate coating and shall be able to work under hot line conditions.

6.8 Conductor Suspension Clamps

Suspensions clamps shall be so designed that the effect of vibration, both on the conductor and on the fitting itself, are minimised. They shall be designed, manufactured and finished so as to avoid sharp radius of curvature, ridges and out growths which might lead to localized pressure or damage to the conductor in service. The clamp shall permit the conductor to slip before failure of the conductor occurs. The clamps shall have sufficient contact surface to minimize damage due to fault current.

The wire groove diameter shall be within the limits of 1.0 and 1.15 times the diameter of the conductor. Suspension clamp shall be made according to Dwg. No. PDW/DF-318. The bodies and keepers shall be of cast or forged high strength corrosion resistant aluminium alloy. Connecting pieces, bolts, nuts and locks washers shall be made of hot dip galvanized steel. Cotter pins shall be made of stainless steel. Edges and corners shall be rounded to minimise field contractions and radio interference.

7 TESTS

7.1 Type Tests

Type tests are intended to verify and established design characteristics. They shall be made once only on hardware identical in all essential details with those to be supplied.

The following type tests shall be carried out in according with clause 8,9 and 10.

i) Mechanical Test	On each individual item or hardware
ii) Resistance to conductor slippage test	On suspension clamp only

iii) Corona Test) For complete insulator String.

7.2 Sample Tests

Sample tests shall be made to verify the quality and workmanship. The following sample test shall be performed in accordance with clause 8, 9, 11, 12, & 13.

i)	Visual examination	On each item of hardware
ii)	Verification of dimensions	
iii)	Mechanical test	On suspension clamp only
iv)	Resistance to conductor slippage test	
v)	Galvanising test	On all ferrous parts

8 MECHANICAL TEST

8.1 For Hardware Except Arcing Horn

Th fitting shall be held in tensile testing machine in a manner approximating as nearly as possible to the arrangement to be used in service. A tensile load equal to one-half of the specified minimum failing load shall be applied and increased at a steady rate. Failure of the fitting shall not occur at a load less than the specified minimum failing load as per Table-I & Table-II.

8.2 For Arcing Horn

Arcing horn shall be rigidly supported in a manner approximating as nearly as possible to the arrangement in service and a load of 150 Kg shall be applied parallel to the insulator string axis at each outer extremity of the fitting. The fitting shall not fail or show any signs of distortion or over-stressing of the material.

9 RESISTANCE TO CONDUCTOR SLIPPAGE TEST

Test piece shall be assembled in accordance with manufacturer's recommendations on conductors of the size and type with which it is to be used. The assembly shall be mounted in a tensile testing machine and anchored in a manner approximating as nearly as possible to the arrangement to be used in service, precautions being taken to avoid birdcaging of the conductor. The length of conductor joint in the test assembly should preferably be not less than 100 times the overall diameter of the conductor.

A tensile load of about 50% of the minimum failing load as specified in table-I and table-II shall be applied and

the conductor shall be marked in such a way that movement relative to the fitting can easily be detected, without any subsequent adjustment of the fitting, the load shall be steadily increased to 95% of the minimum failing load and then reduced to 90% of the minimum failing load and maintained for 1 minute. There shall be no movement of the conductor relative to the fitting due to slip during this 1 minute period and no failure of the fitting.

10 CORONA TEST

Typical insulator sets completely assembled with all fittings shall be set up in a manner as nearly as possible to the arrangement to be used. A test voltage of 160kV, 100kV and 50kV shall be applied for the nominal voltage of 220kV, 132kV and 66kV respectively between the conductor and earth for five minutes during which time no corona formation shall be visible or audible with the room in complete darkness.

11 VISUAL EXAMINATION

The test samples shall be examined visually for the following defects:

Visual Examination

Examination	Defects
Material	Not as specified in relevant clauses.
Construction	Not of the shape given in relevant Dwg. Any part missing.
Finish	Galvanising not proper. Presence of burrs, black and bare spots, dross and projections, which will interfere with proper use of the articles.

12 VERIFICATION OF DIMENSIONS

The binding dimensions of the hardware shall be measured and shall be as shown on the relevant approved drawings subject to the tolerance given in clause 5.

13 GALVANISING TEST

This test shall be carried out on all ferrous parts complying with the following requirements:

i. Weight of zinc coating

ii. Uniformity of zinc coating

iii. Adherence of zinc coating

This test shall be performed in accordance with WAPDA Specification P-82:81 (latest revision)

14 SAMPLING PLAN --ACCEPTANCE AND REJECTION

I. Sampling sizes are designated by code letters.. Table-III shall be used to find the applicable code letter for the particular lot or batch size for various tests specified in this specification. While the number of units of product from each lot or batch which are to be inspected (sample size) & the criteria for determining the acceptability of the lot or batch (acceptance & rejection numbers) for different code letters can be obtained from the table-IV given below.

II. The number of sample units inspected shall be equal to the first sample size given in Table-IV. If the number of defective units found in the first sample is equal to or less than the first acceptance number, the lot shall be acceptable. If the number of defectives found in the first sample is equal to or greater than the first rejection number, the lot shall be rejected. If the number of defectives found in the first sample is between the first acceptance and rejection number, a second sample of the size given by the plan shall be inspected. The number of defectives found in the first & the second samples shall be accumulated. If the cumulative number of defectives is equal to or less than the second acceptance number, the lot shall be acceptable. If the cumulative number of defectives is equal to or greater than the second rejection number, the lot shall be rejected.

Table-III Sample Size

Lot or Batch Size	Sample size for Test Specified in Clause 8,9, & 13.	Sample size for dimensional and finish defects
2 to 8	A	A
9 to 15	A	B
16 to 25	A	C
26 to 50	A	D
51 to 90	B	E
91 to 150	B	F
151 to 280	B	G
281 to 500	B	H
501 to 1200	C	J

Table-IV Sample Acceptance Criteria

Sample size code letters	Sample	Sample size	Cumulative sample size	Acceptance Number	Rejection Number
1	2	3	4	5	6
A	First	1	1	0	1
	Second	-	-	-	-
B	First	2	2	0	2
	Second	2	4	1	2
C	First	3	3	0	2
	Second	3	6	1	2
D	First	5	5	0	2
	Second	5	10	1	2
E	First	8	8	0	2
	Second	8	16	1	2
F	First	13	13	0	3
	Second	13	26	3	4
G	First	20	20	1	4
	Second	20	40	4	5
H	First	32	32	2	5
	Second	32	64	6	7
J	First	50	50	3	7
	Second	50	100	8	9

15 MARKING AND PACKING

The material shall be packed in wooden crates for export shipment to permit convenient handling and to protect against loss or damage to final destination. Containers (wooden crates) shall be designed for handling by forklifts, trucks and by slings around the containers. The weight of each package should be between 100 and 150 Kg.

Packages shall be designed for rough handling. All wooden crates shall be clearly marked to indicate.

1. Quantity
2. Name of hardware item
3. Manufacturer's name

All packages shall be numbered consecutively so that total shipment can be readily determined.

16 INFORMATION TO BE SUPPLIED

The following information shall be supplied with the bid and failure to supply the same may subject the bid to disqualifications:

i. Detailed fully dimensioned drawings of hardware for suspension strings.

ii) Specification giving material grade & composition of all items of hardware.

iii) Catalogues/literature of standardised items.

iv) Test certificates.

v) One complete sample of hardware for all types of suspension strings.

vi) Detail of manufacturing & testing facilities available with manufacturers.

17 DRAWINGS

The following drawings form the part of this specification:

a)	Single Suspension String	PDW/DF-314
b)	Self Locking Ball Hook	PDW/DF-315
c)	Socket Eye	PDW/DF-316
d)	Arcing Horns	PDW/DF-317
e)	Suspension Clamp for ACSR Conductors	PDW/DF-318
f)	Socket Clevis Type A	PDW/DF-376
g)	Yoke Plate	PDW/DF-377
h)	Ball Clevis	PDW/DF-382
i)	Socket Clevis Type B	PDW/DF-378
j)	Eye Clevis	PDW/DF-379
k)	Double Suspension String	PDW/DF-381

---

yk

CONDUCTOR DESIGNATION	DIMENSIONS A	B	C 220 KV	132 KV	66 KV
RAIL	1525	188	750	600	-
CUCKOO	1450	180	-	600	-
LYNX	1140	170	-	600	-
DOG	840	165	-	-	500
CARDINAL	1400	180	-	600	-

ITEM	QTY.	DESCRIPTION	DRGNO.
1.	1	SELF LOCKING BALL HOOK	PDW/DF-315
2.	1	SOCKET EYE	PDW/DF-316
3.	1	ARCING HORN BOTTOM	PDW/DF-317
4.	1	NON MAGNETIC SUSPENSION CLAMP	PDW/DF-318
5.	2	VIBRATION DAMPERS STOCK BRIDGE	PDW/DF-322
6.		DISC. INSULATOR 254 x 146 MM	

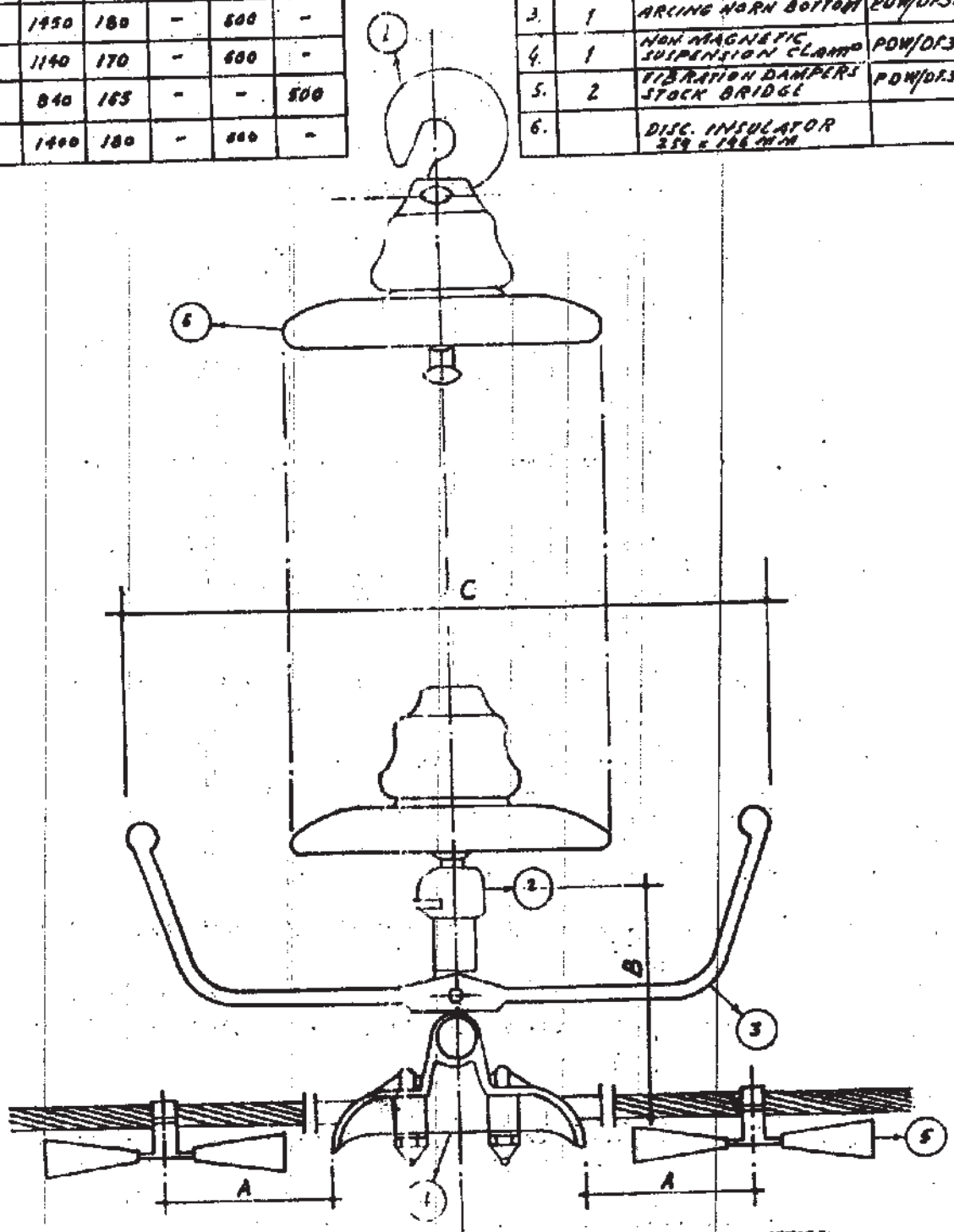

DIMENSION SHOWN IN MILLIMETRES

PAKISTAN WATER AND POWER DEVELOPMENT AUTHORITY			DESIGN DEPARTMENT
DRAWN	AZHAR SHAH		SINGLE SUSPENSION STRING
CHECKED	GHULAM RASUL		
JUNIOR ENGINEER	NAZAR ABBAS		
SENIOR ENGINEER	A'UNAWAR-A-MALIK		
DIRECTOR	S. ISHTIAQ HUSSAIN		SCALE ✓ DATE 27-9-80
CHIEF	DAVID AKHTER		DWG. NO. PDW/DF-314

NO.	DATE	REVISIONS	BY
1	28-7-82	DIMENSION FOR ACSR CARDINAL CONDUCTOR ADDED	

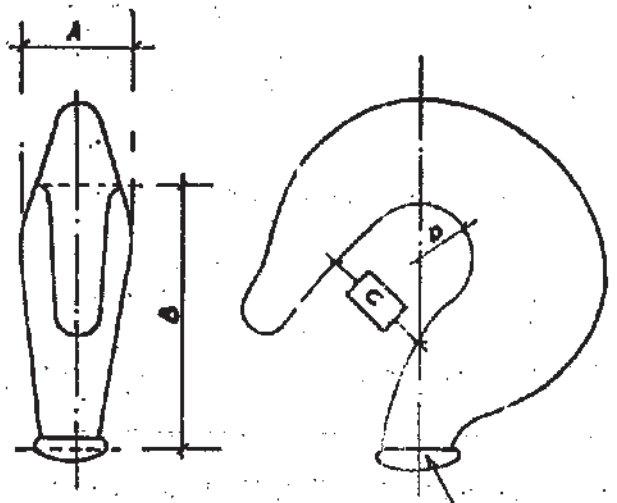

BALL SIZE IEC [16] mm A FOR DOG, LYNX CUCKOO, RAIL

BALL SIZE IEC [20] mm A FOR CARDINAL

DESCRIPTION	A	B	C	D
SELF LOCKING BALL HOOK	30	60	22	14

[ ] INDICATES BINDING DIMENSION.

DIMENSION SHOWN IN MILLIMETRES

1	2-3-82	BALL SIZE FOR ACSR CARDINAL CONDUCTOR ADDED		
No.	DATE	REVISIONS	BY	

PAKISTAN WATER AND POWER DEVELOPMENT AUTHORITY			DESIGN DEPARTMENT
DRAWN	ILNAR SHAH		SELF LOCKING BALL HOOK
CHECKED	GHULAM RASUL		
JUNIOR ENGINEER	NIZAR ABBAS		
SENIOR ENGINEER	MUNAWAR-A-MALIK		
DIRECTOR	S ISHTIAQ HUSSAIN		SCALE / DATE 27-9-80
CHIEF	DAVID AKHTER		DWG: NO. PDW/DF315

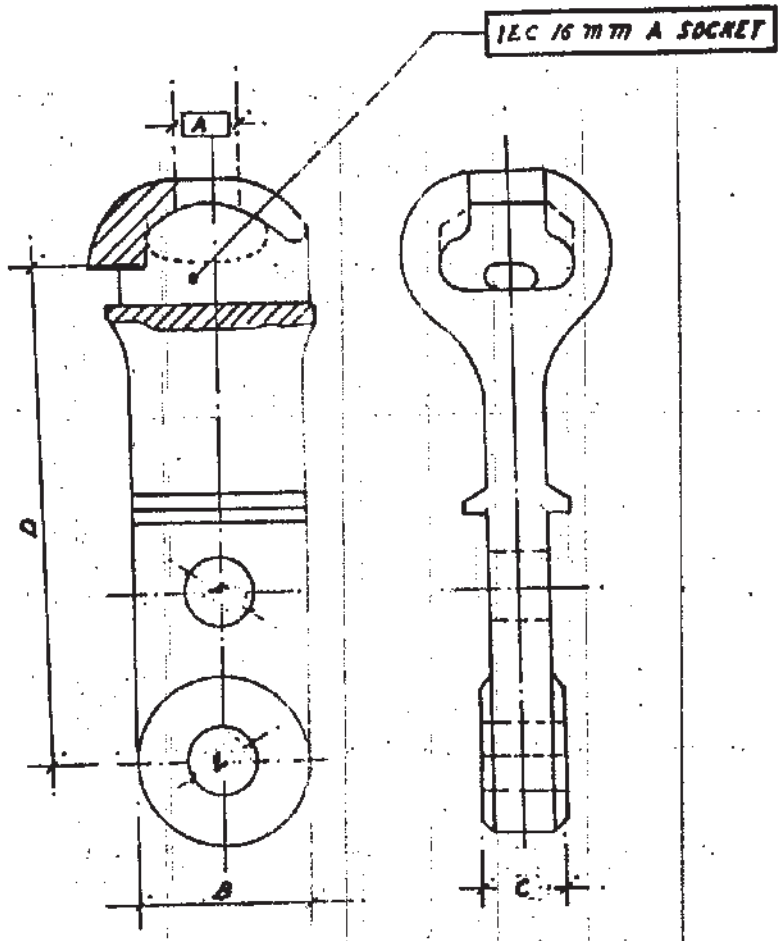

SOCKET EYE

DESCRIPTION	A	B	C	D	E	F
DOG & LYNX	16	44.5	22	110	17.5	14
CUCKOO & RAIL	16	44.5	35	110	17.5	14
CARDINAL	20	44.5	35	110	17.5	14

INDICATES BINDING DIMENSION

DIMENSION SHOWN IN MILLIMETRES

1	2.9.82	DIMENSIONS FOR ACSR CARDINAL ADDED.	
NO	DATE	REVISIONS	BY

PAKISTAN WATER AND POWER DEVELOPMENT AUTHORITY			DESIGN DEPARTMENT
DRAWN	AZHAR SHAH		SOCKET EYE (FOR SUSPENSION STRING)
CHECKED	GHULAM RASUL		
JUNIOR ENGINEER	NASIR ABBAS		
SENIOR ENGINEER	MUNAWAR-A-MALIK		
DIRECTOR	S. ISHTIAQ HUSSAIN		SCALE — DATE 27.9.80
CHIEF	JAVID AKHTER		DWG. NO PDW/DE.316

FOR SINGLE SUSPENSION ASSEMBLY

VOLTAGE KV	SINGLE SUSPENSION ASSEMBLY					SINGLE TENSION / DOUBLE SUSPENSION ASSEMBLY				
	A	B	C	D	E	A	B	C	D	E
66	500	110	14	30	12	250	110	14	30	12
132	600	120	14	30	12	300	120	14	30	12
220	750	125	18	30	12	375	125	18	30	12

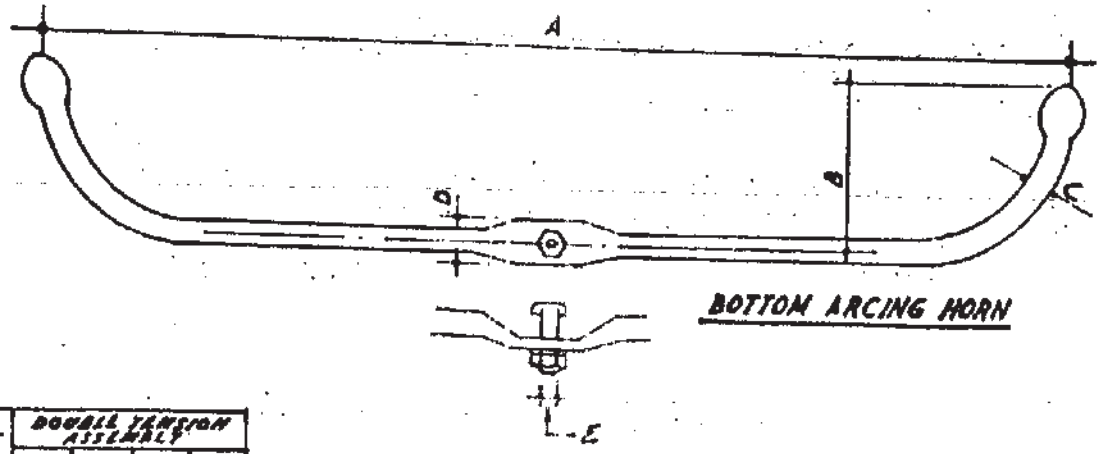

BOTTOM ARCING HORN

VOLTAGE	DOUBLE TENSION ASSEMBLY			
	A	B	C	D
66 KV	245	115	14	12
132 KV	295	125	16	12
220 KV	370	140	18	12

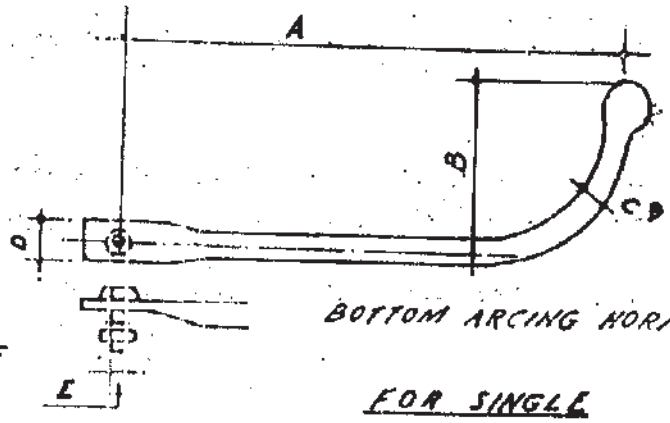

BOTTOM ARCING HORN

FOR SINGLE TENSION ASSEMBLY

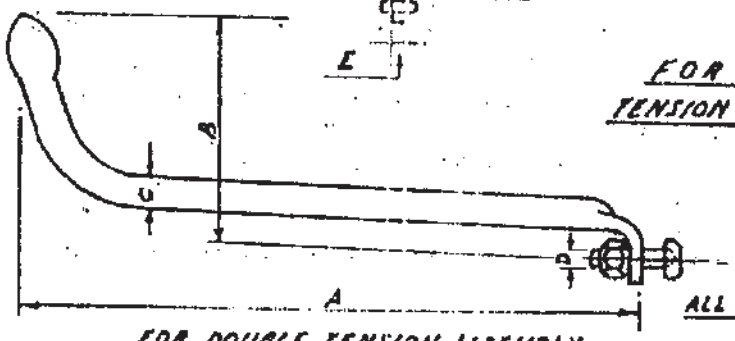

ALL DIMENSION IN MILLIMETRES

FOR DOUBLE TENSION ASSEMBLY
BOTTOM ARCING HORN

PAKISTAN WATER AND POWER DEVELOPMENT AUTHORITY			DESIGN DEPARTMENT
DRAWN	AZHAR SHAH		ARCING HORNS
CHECKED	GHULAM RASUL		
JUNIOR ENGINEER	NAZAR ABBAS		
SENIOR ENGINEER	MUNAWAR-A-MALIK		
DIRECTOR	S. ISHTIAQ HUSSAIN		SCALE / DATE 27-9-80

1	9-5-82	BOTTOM ARCING HORN DOUBLE TENSION ASSEMBLY ADDED

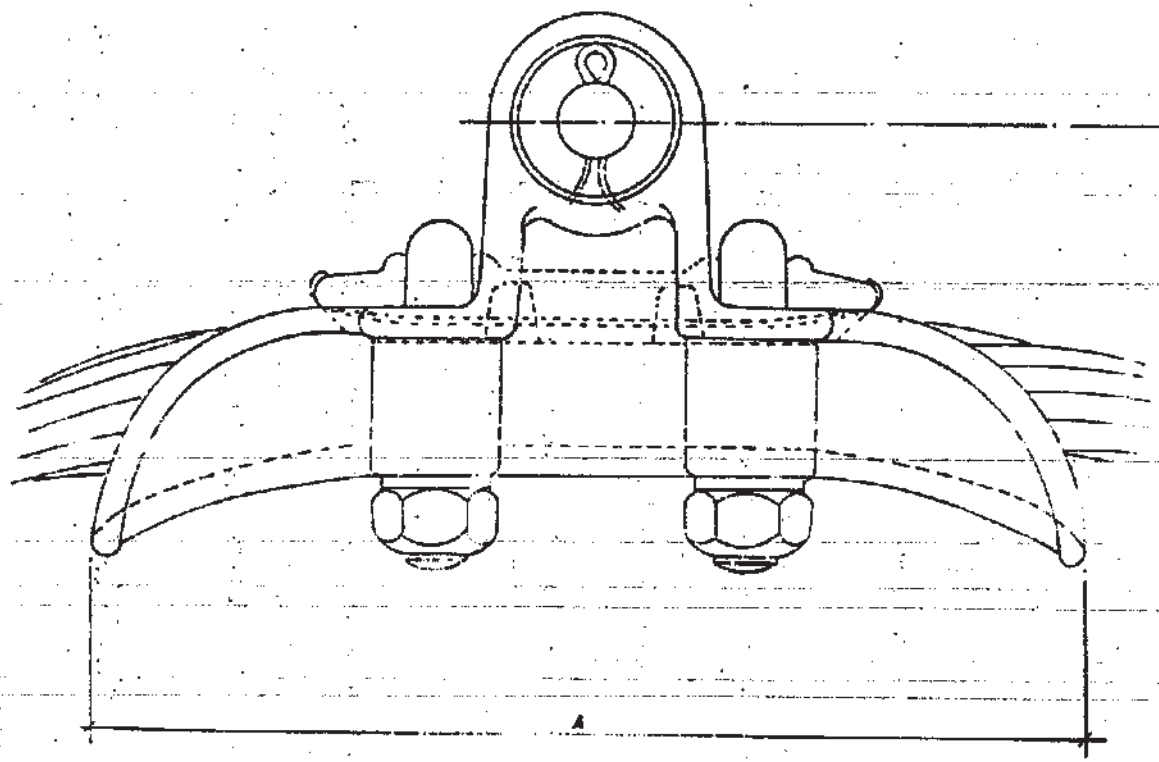

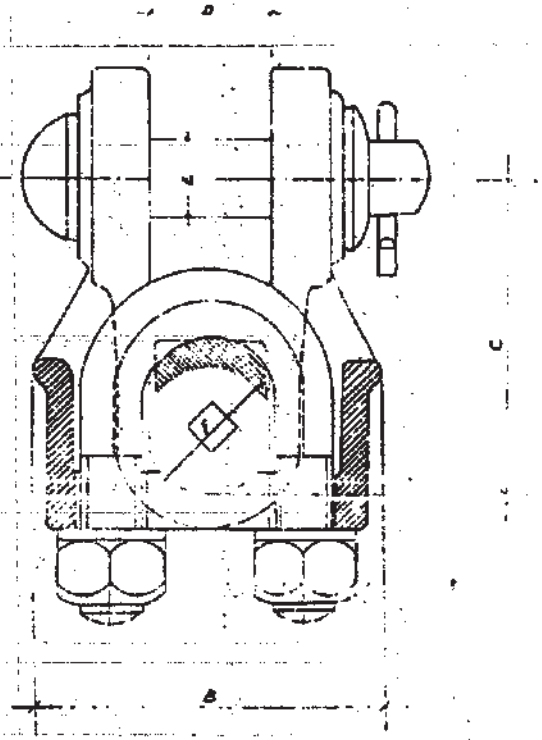

DIMENSION SHOWN IN MILLIMETRES

INDICATES BINDING DIMENSION

DESCRIPTION	A	B	C	D	E	F
DOG	180	62	55	24	16	14.2
LYNX	190	65	60	24	16	19.5
CHUKOO	220	87	70	37	16	27.7
RAIL	226	87	70	37	16	29.6
CARDINAL	230	87	70	37	16	30.4

NO	DATE	REVISION	BY
1	7-9-82	DIMENSIONS FOR ACSR CARDINAL ADDED.	

PAKISTAN
WATER AND POWER DEVELOPMENT AUTHORITY

DESIGN DEPARTMENT

DRAWN	ATHAR SHAH	
CHECKED	SAMAN HAZEL	
SENIOR ENGINEER	HAZAR ABBAS	
SENIOR ENGINEER	MUHAMMAD-A-MALIK	
DIRECTOR	S. ISHTIAQ HUSSAIN	
CHIEF ENGINEER	JAVID AKHTER	

SUSPENSION CLAMP FOR ACSR CONDUCTORS

SCALE -

DATE 27-9-80

DWG: NO. PDW/DF-318

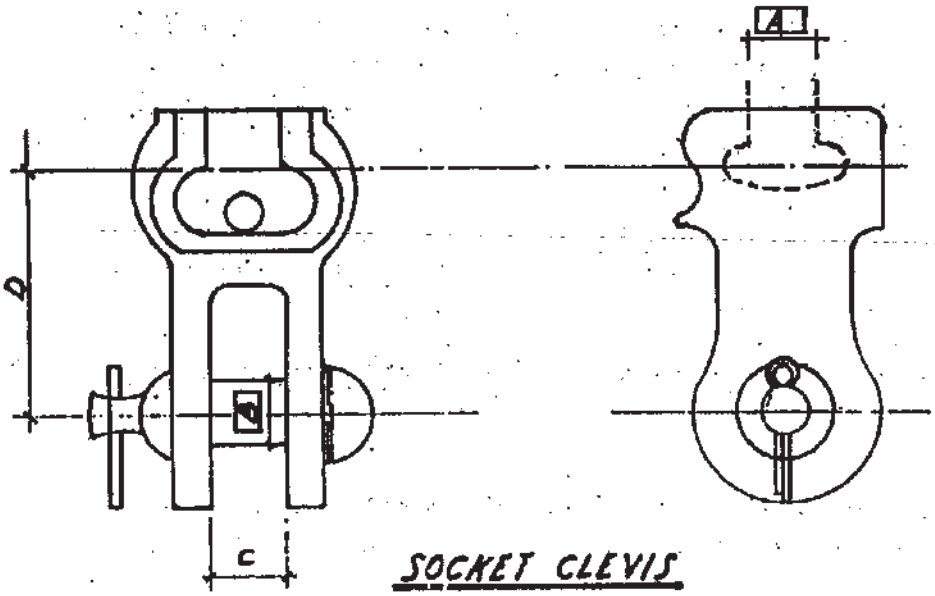

SOCKET CLEVIS
TYPE - A

DESCRIPTION	DIMENSIONS			
	A	B	C	D
DOG, LYNX	16	16	18	70
CUCKOO, RAIL	16	16	20	70
CARDINAL	20	16	20	70

DIMENSIONS SHOWN IN MILLIMETRES

INDICATES BINDING DIMENSIONS

PAKISTAN WATER AND POWER DEVELOPMENT AUTHORITY			DESIGN DEPARTMENT
DRAWN	AZHAR SHAH		SOCKET CLEVIS TYPE - A
CHECKED	GHULAM RASUL		
ASST. DIRECTOR	NAZAR ABBAS		
DEPUTY DIRECTOR	MUHAMMAD-A-MALIK		
DIRECTOR	S. ISHTIAQ HUSSAIN		SCALE ✓ DATE 13-9-82
CHIEF ENGINEER			DWG. NO. PDW/DF-376

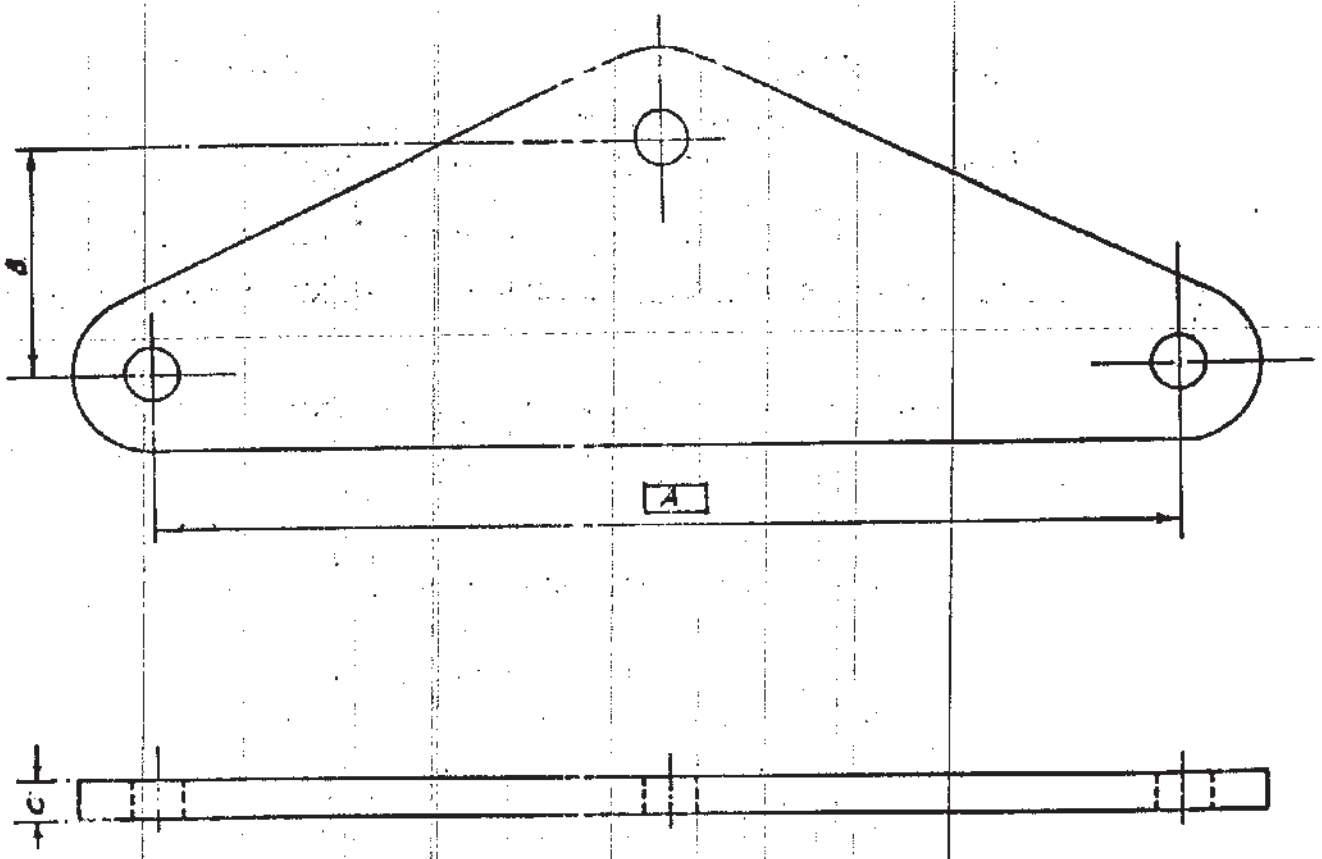

DESCRIPTION	A	B	C
DOG, LYNX	400	90	16
CUCKOO, RAIL CARDINAL	400	90	18

ALL DIMENSIONS IN MILLIMETRES

☐ INDICATES BINDING DIMENSIONS

PAKISTAN WATER AND POWER DEVELOPMENT AUTHORITY			DESIGN DEPARTMENT POWER
DRAWN	AZHAR SHAH		YOKE PLATE
CHECKED	GHULAM RASUL		
ASSTT DIRECTOR	NAZAR ABBAS		
DEPUTY DIRECTOR	MUNAWAR-A-MALIK		
DIRECTOR	S. ISHTIAQ HUSSAIN		SCALE ✓ DATE. 13-9-82
CHIEF ENGINEER			DWG: NO. PDW/DF-377

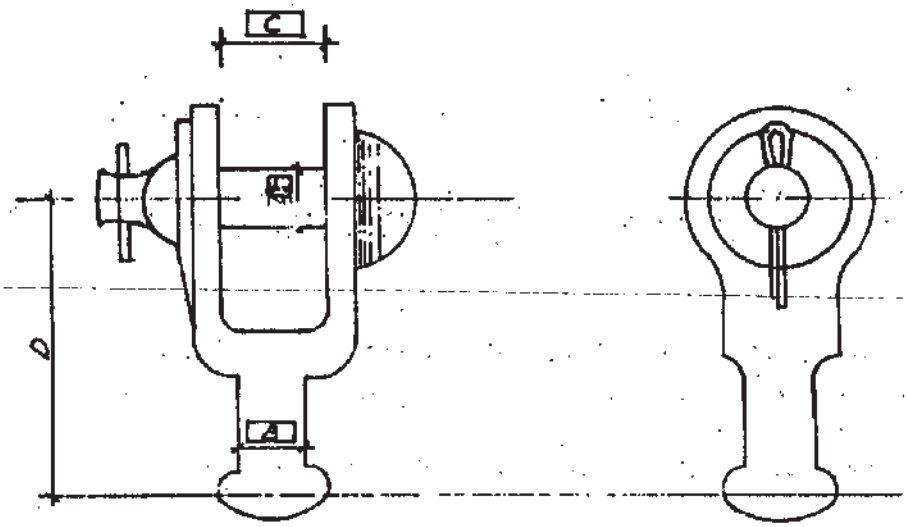

BALL CLEVIS

DESCRIPTION	DIMENSIONS			
	A	B	C	D
DOG, LYNX	16	16	18	75
CUCKOO, RAIL	16	16	20	75
CARDINAL	16	20	20	75

DIMENSION SHOWN IN MILLIMETRES

☐ INDICATES BINDING DIMENSIONS

PAKISTAN WATER AND POWER DEVELOPMENT AUTHORITY			DESIGN DEPARTMENT	
DRAWN	AZHAR SHAH		BALL CLEVIS	
CHECKED	GHULAM RASUL			
ASSTT DIRECTOR	NAZAR ABBAS			
DEPUTY DIRECTOR	MUNAWAR-A-MALIK			
DIRECTOR	S. ISHTIAQ HUSSAIN		SCALE ✓	DATE 13-9-82
CHIEF ENGINEER			DWG: NO. PDW/DF-382	

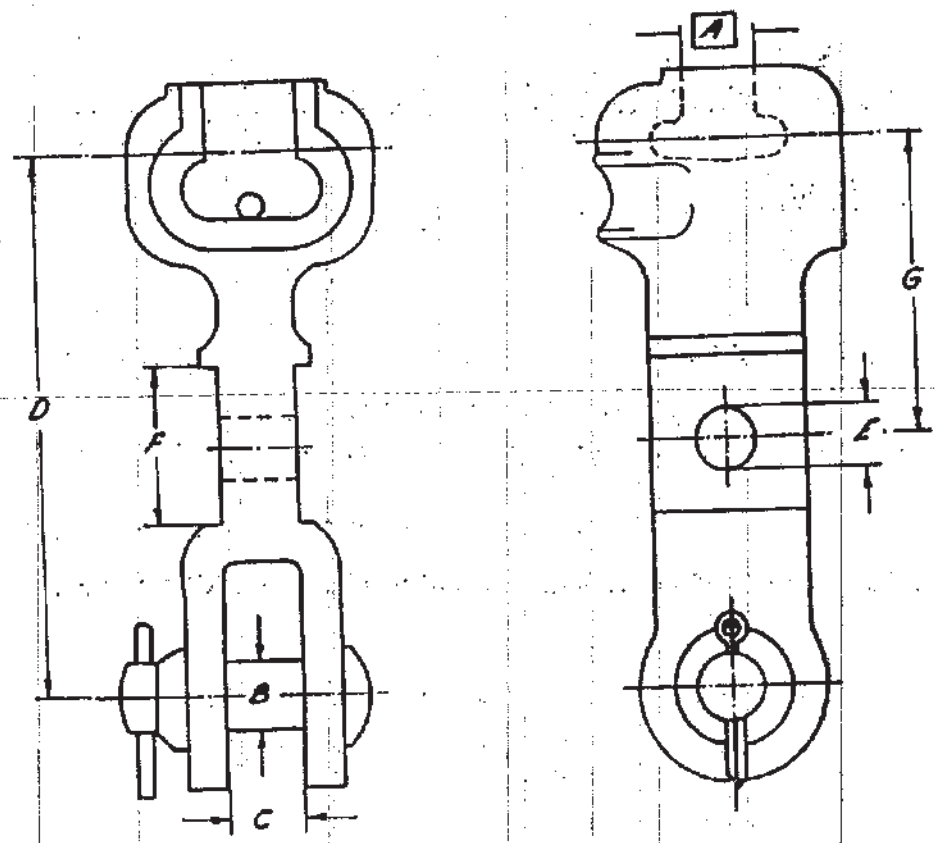

SOCKET CLEVIS

TYPE - B

DESCRIPTION	A	B	C	D	E	F	G
DOG, LYNX	16	16	18	110	14	30	60
CUCKOO, RAIL	16	16	20	110	14	30	60
CARDINAL	20	16	20	110	14	30	60

DIMENSION SHOWN IN MILLIMETERS.

☐ INDICATES BINDING DIMENSIONS

PAKISTAN WATER AND POWER DEVELOPMENT AUTHORITY			DESIGN DEPARTMENT (POWER)
DRAWN	LIAZ ALI MAHMOOD	11-8-82	SOCKET CLEVIS TYPE - B
CHECKED	A. LATIF		
JUNIOR ENGINEER	NAZAR ABBAS		
SENIOR ENGINEER	MUNAWWAR A. MALIK		
DIRECTOR	S. ISHTIAQ HUSSAIN		SCALE:- ✓ DATE:- 13-9-82
CHIEF			DWG. NO. POWDE-378

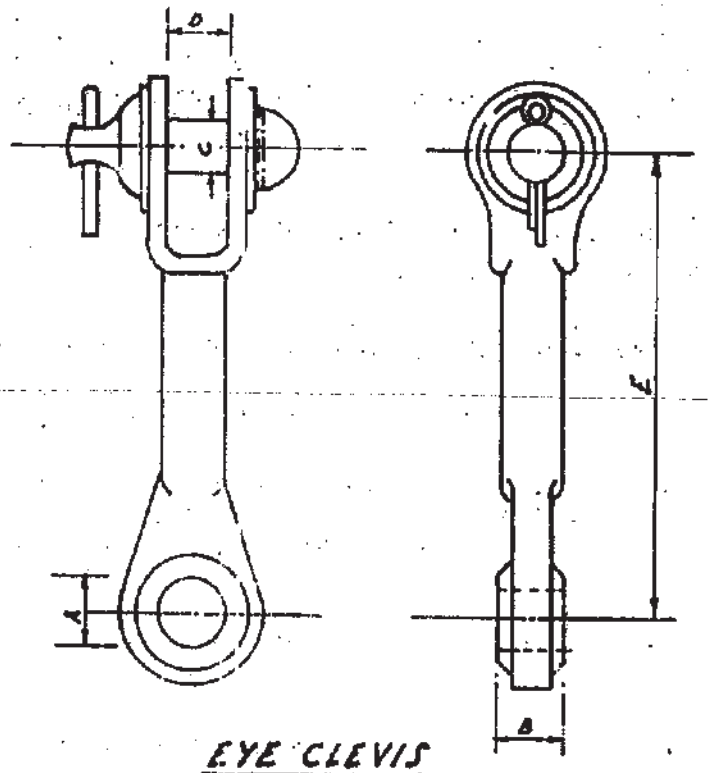

EYE CLEVIS

DESCRIPTION	A	B	C	D	E
DOG, LYNX	18	22	16	18	80
CUCKOO, RAIL CARDINAL	18	35	15	20	80

ALL DIMENSION IN MILLIMETRES

PAKISTAN WATER AND POWER DEVELOPMENT AUTHORITY			DESIGN DEPARTMENT POWER	
DRAWN	AZHAR ALI SHAH		EYE CLEVIS WITH 90° EYE	
CHECKED	GHULAM RASUL			
JUNIO DIRECTOR	NAZAR ABBAS			
DEPUTY DIRECTOR	MUNAWAR-A-MALIK			
DIRECTOR	S. ISHTIAQ HUSSAIN		SCALE ✓	DATE 13-9-82
CHIEF ENGINEER			DWG: NO. PDN/DF-379	

No.	QTY	DESCRIPTION	DWG. NO.
1	1	SELF LOCKING BALL HOOK	PDW/DF-315
2	1	SOCKET CLEVIS TYPE-A	PDW/DF-376
3	2	YOKE PLATE	PDW/DF-377
4	2	BALL CLEVIS	PDW/DF-382
5	2	SOCKET CLEVIS TYPE-B	PDW/DF-378
6	1	EYE CLEVIS	PDW/DF-379
7	1	SUSPENSION CLAMP	PDW/DF-318
8		DISC. INSULATORS 254-146	——
9	1	ARCING HORN.	PDW/DF-317

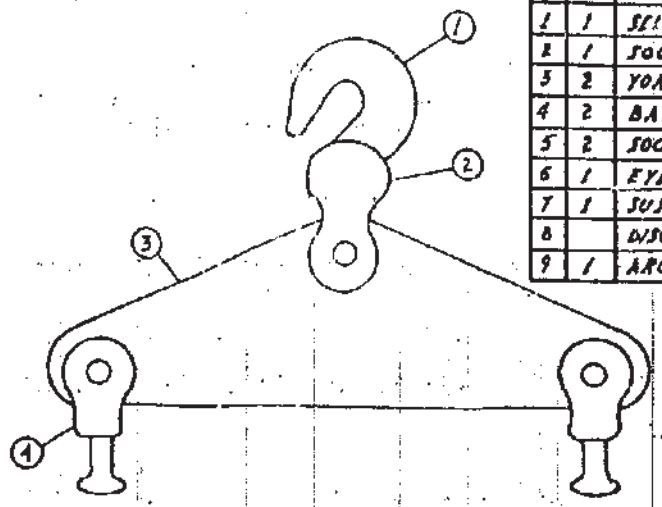

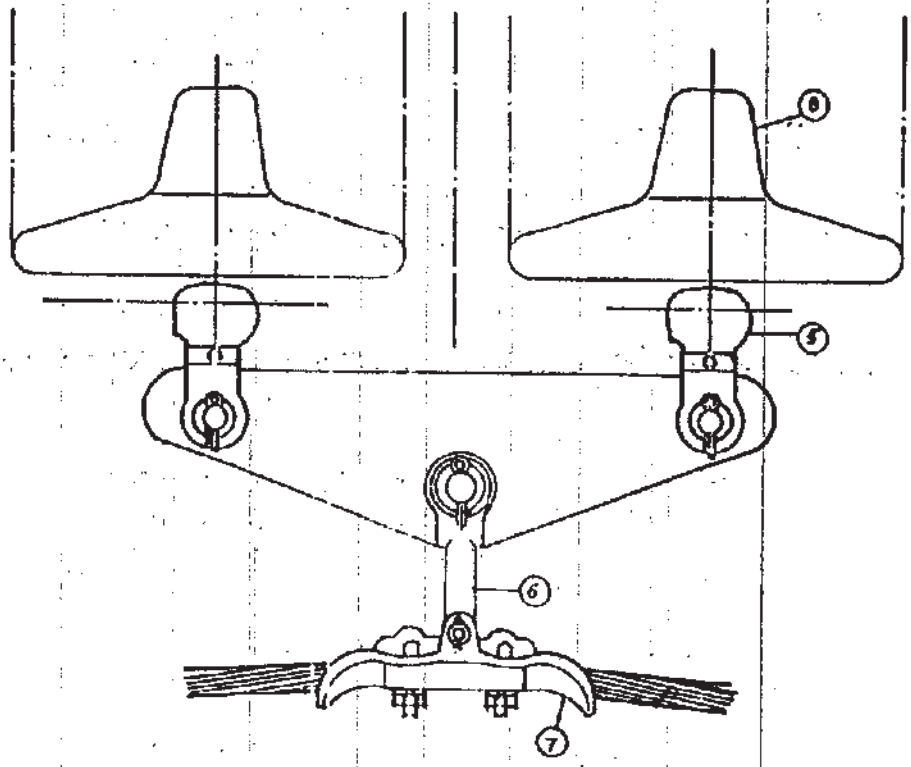

PAKISTAN WATER AND POWER DEVELOPMENT AUTHORITY			DESIGN DEPARTMENT
DRAWN	AZHAR SHAH		DOUBLE SUSPENSION STRING
CHECKED	GHULAM RASUL		
ASSTT. DIRECTOR	NAZAR ABBAS		
DEPUTY DIRECTOR	MUNAWAR-A-MALIK		
DIRECTOR	S. ISHTIAQ HUSSAIN		SCALE ✓ / DATE 13-9-82
CHIEF ENGINEER			DWG: NO. PDW/DF-381