Standard Bidding Document

Structural Strengthening of Annexe Building of SBP BSC Multan (Works)

National

Single Stage-Two Envelope

October 20, 2026

SBP BSC Multan (SBP Banking Services Corporation (BSC)),Assistant Executive Engineer
Pul Mouj Darya Road LMQ Road, Multan City, Multan (District), Multan Division (Division), Punjab (Province).
Phone: +92-321-667-8800, Email: umer.javaid@sbp.org.pk

Table of Contents

REQUEST FOR BIDS 1

Instructions to Bidders 3

Bid Data Sheet 31

Bids Data Sheet (BDS) 32

Eligibility Criteria 36

Evaluation Criteria 38

Jobs/Lots 39

Related Services : 54

Work Specifications and Market Rates 55

Scope of Work 85

Price Schedule 86

General Conditions of Contract 88

Special Conditions of Contract 98

Bid Securing Declaration 103

Contract Form 105

Integrity Pact 108

Performance Guarantee Form 110

Annexure 113

Annexure-01 - Bidding Data Sheet (BDS) – Part-B 114

Annexure-02 - Section VIII - SCC (Part-B) 114

Annexure-03 - Formula for Price Adjustment 114

Annexure-04 - Scope of Works & KPI 1

Annexure-05 - Technical Specifications & Drawings 1

Annexure-06 - Undertaking 114

Annexure-07 - Supplier Account details 115

Procurement Forms 116

Past Experience and Completed Contracts 1

Additional Forms and Documents 119

REQUEST FOR BIDS

PROCUREMENT OF CIVIL WORKS

1. The **SBP BSC Multan (SBP Banking Services Corporation (BSC))** has reserved Funds for the procurement planned for FY **2026-27**. The **SBP BSC Multan (SBP Banking Services Corporation (BSC))** intends to apply part of the proceeds of this Fund to cover eligible payments under the contract for the "**Structural Strengthening of Annexe Building of SBP BSC Multan**" with the reference of "**P113536**".

2. The **SBP BSC Multan (SBP Banking Services Corporation (BSC))** invites sealed Bids from eligible Bidders for procurement of Works **(Structural Strengthening of Annexe Building of SBP BSC Multan)** described in the bidding documents on **EPADS v2.0**.

3. **Single Stage-Two Envelope** will be used by adopting **Least Cost Based Selection (LCBS)** Technique for the subject procurement, in line with the Public Procurement Rules, 2004 and any Regulations, Regulatory Guides, Procurement Guidelines or Instructions issued by the Authority from time to time.

4. All Bids must be accompanied by a Bid Security amount described in Bid Security Section in Bidding Document in the form of **Pay Order, Banker's Cheque, Demand Draft**. Or all bids must be accompanied by bid securing declaration in the format specified in the Bidding documents

5. E-Bidding documents, containing detailed terms & conditions, specifications and requirements etc. are available on **e-Pak Acquisition and Disposal System (EPADS)** at **https://epads.gov.pk/opportunities/federal/procurements/113536** for all the interested bidders registered on **EPADS v2.0**. Bidders are required to get themselves registered on **EPADS v2.0** to participate in Bidding process.

6. The e-bids, prepared in accordance with the instructions in the e-Bidding documents, must be submitted through **EPADS v2.0** on or before **Tuesday, November 10, 2026 03:00 PM**. E-bids will be opened by using **EPADS v2.0** on the same day at **Tuesday, November 10, 2026 03:30 PM**. Manual

submission of Bids shall not be entertained. Those vendor who have not yet registered on the new version of **EPADS v2.0**, may register themselves on **https://vendors.epads.gov.pk/**. A tutorial to explain the registeration process is available at **https://www.youtube.com/watch?v=MNW6T38v7tc.**

In terms of Rules 48 of Public Procurement Rules, 2004 Grievance Redressal Committee (GRC) is notified for the subject procurement and notification copy is available on the procuring agency's website and on Authority's website at (**www.ppra.org.pk**).

SBP BSC Multan (SBP Banking Services Corporation (BSC)), Assistant Executive Engineer
Pul Mouj Darya Road LMQ Road, Multan City, Multan (District), Multan Division (Division), Punjab (Province).
+92-321-667-8800
umer.javaid@sbp.org.pk

Instructions to Bidders

A. INTRODUCTION

1. **Scope of Bid**

1.1. The Procuring agency/Employer (PA), as indicated in the Bid Data Sheet (BDS) invites Bids for the execution of Works as specified in the BDS and Section V- Works Requirements. The name, identification, and number of lots (contracts) of this National/ International Competitive Bidding process are specified in the BDS.

2. **Source of Funds**

2.1. Source of funds as referred in Clause 2 of Bid Data Sheet.

3. **Eligible Bidders**

3.1. A bidder may be natural person, company or firm or public or semi-public agency of Pakistan or any foreign country, or any combination of them with a formal existing agreement (on Judicial Papers) in the form of a joint venture or consortium. In the case of a joint venture or consortium, all members shall be jointly and severally liable for the execution of the Contract in accordance with the terms and conditions of the Contract. The joint venture or consortium shall nominate a Lead Member as nominated in the BDS, who shall have the authority to conduct all business for and on behalf of any and all the members of the joint venture or consortium during the Bidding process, and in case of award of contract, during the execution of contract. Verifiable copy of the agreement that forms a joint venture, consortium or association shall be required to be submitted as part of the Bid.

Any bid submitted by the joint venture, consortium or association shall indicate the part of proposed contract to be performed by each party and each party shall be evaluated (or post qualified if required) with respect to its contribution only, and the responsibilities of each party shall not be substantially altered without prior written approval of the Procuring Agency and in line with any instructions issued by the Authority.

(The limit on the number of members of JV or Consortium may be prescribed

in BDS, in accordance with the guidelines issued by the PPRA).

3.2. The invitation for bids is open to all prospective bidders subject to any provisions of incorporation or licensing by the respective national/ international incorporating agency or statutory body established for that particular trade or business. Procuring agencies shall specify the registration/licensing requirements for the foreign bidder keeping in view the requirement of that business.

3.3. A Bidder shall not have a conflict of interest. All Bidders found to have a conflict of interest shall be disqualified. A Bidders may be considered to have a conflict of interest with one or more parties in this Bidding process, if they:

3.3.1. are associated or have been associated in the past, directly or indirectly with a firm or any of its affiliates which have been engaged by the Procuring agency/Employer to provide consulting services for the preparation of design or technical specifications of the works that are the subject of the bid; or

3.3.2. have controlling shareholders in common; or

3.3.3. receive or have received any direct or indirect subsidy from any of them; or

3.3.4. have the same legal representative for purposes of this Bid; or

3.3.5. have a relationship with each other, directly or through common third parties, that puts them in a position to have access to information about or influence on the bid of another bidder, or influence the decisions of the Procuring agency/Employer regarding this Bidding process; or

3.3.6. Submit more than one bid in this bidding process.

3.4. A Bidder may be ineligible if –

3.4.1. he is declared bankrupt or, in the case of company or firm, insolvent;

3.4.2. payments in favor of the bidder is suspended in accordance with the judgment of a court of law other than a judgment declaring bankruptcy and resulting (in accordance with the national laws) in the total or partial loss of the right to administer and dispose of its property;

3.4.3. the bidder is convicted, by a final judgment of a Court of Law or relevant Professional Statuary Body, of any offence involving professional conduct;

3.4.4. The bidder is debarred/ blacklisted by a national level Procuring agency/Employer and hence debarred due to involvement in corrupt and fraudulent practices, or performance failure or due to breach of bid securing declaration.

3.5. As and when required, bidders shall provide to the Procuring agency/Employer evidence of their eligibility, proof of compliance with the necessary legal requirements to carry out the contract effectively.

3.6. Bidders shall submit proposal relating to the nature, conditions and modalities of sub-contracting wherever the sub-contracting of any elements of the contract is envisaged.

4. **Eligible Material and Equipment**

4.1. All the material and equipment to be mobilized under the contract shall have their origin in eligible source countries, and all expenditures made under the contract will be limited to such materials and equipment. For this purpose, ineligible countries are stated in the section-IV titled as “Eligible Countries”.

B. BIDDING DOCUMENTS

5. **Contents of Bidding Documents**

5.1. The scope of Works, bidding procedures, and terms and conditions of the contract are prescribed in the bidding documents. In addition to the Invitation for Bids, the bidding documents which should be read in

conjunction with any addenda issued in accordance with ITB 7.1 include:

Section I -Invitation for Bids

Section II Instructions to Bidders (ITBs)

Section III Bid Data Sheet (BDS)

Section IV Eligible Countries

Section V Evaluation and Qualification Criteria

Section VI Works Requirements Technical Specifications & Schedule of Requirements

Section VII Standard Bidding Forms

Section VIII General Conditions of Contract (GCC)

Section IX Particular Conditions of Contract (PCC)

Section X Contract Forms

5.2. The bidder is expected to examine all instructions, forms, specifications, terms and conditions prescribed in the bidding documents. Failure to furnish all the information required in the bidding documents will be at the bidder's risk and may result in the rejection of his bid.

6. **Clarification of Bidding Document, Pre-bid Meeting**

6.1. A prospective bidder requiring any clarification of the bidding document may notify the Procuring agency/Employer through EPADS.

6.2. The Procuring agency/Employer shall respond to the request for clarification in accordance with Rule 31 of the Public Procurement Rules 2004.

6.3. Should the Procuring Agency deem it necessary to amend the BIDDING document as a result of a clarification, it shall do so following the procedure under ITB 7.

6.4. If indicated in the BDS, the bidder's designated representative is invited at the bidder's cost to attend a pre-bid meeting at the place, date and time mentioned in the BDS. During this pre-bid meeting, prospective bidders may request clarification of the schedule of requirement, the evaluation criteria or any other aspects of the bidding documents.

6.5. Minutes of the pre-bid meeting, if applicable, including the text of the questions asked by bidders, including those during the meeting (without identifying the source) and the responses given, together with any responses prepared after the meeting will be uploaded on EPADS. Any modification to the bidding documents that may become necessary as a result of the pre-bid meeting shall be made by the Procuring agency/Employer exclusively through the use of an Addendum pursuant to ITB 7. Non-attendance at the pre-bid meeting will not be a cause for disqualification of a bidder.

6.6. The bidder is advised to visit and examine the Site of Works and its surroundings and obtain for itself on its own responsibility all information that may be necessary for preparing the bid and entering into a contract for construction of the Works. The costs of visiting the Site shall be at the bidder's own expense.

6.7. The bidder and any of its authorized personnel will be granted permission by the Procuring agency/Employer to enter upon its premises and lands for the purpose of such visit, but only upon the express condition that the bidder and its personnel will release and indemnify the Procuring agency/Employer from and against all liability in respect thereof, and will be responsible for death or personal injury, loss of or damage to property, and any other loss, damage, costs, and expenses incurred as a result of the inspection.

7. **Amendment of Bidding Documents**

7.1. The procuring agency may issue notification of any change, addition, modification or deletion in accordance with Rule 23 of the Public Procurement Rules 2004 i.e. Bidding Documents.

7.2. To give prospective bidders reasonable time in which to take an addendum/corrigendum into account in preparing their bids, the Procuring agency/Employer may, at its discretion, extend the deadline for the submission of bids:

Provided that the Procuring agency/Employer shall extend the deadline for submission of bid in pursuance of Rule 27 of the Public Procurement Rules 2004, i.e. Extension of time for submission of bids, if such an addendum is

issued within last three (03) days of the bid submission deadline.

C. PREPARATION OF BIDS

8. **Language of Bid**

8.1. The bid prepared by the bidder, as well as all correspondence and documents relating to the bid exchanged by the bidder and the Procuring agency/Employer shall be written in the English language unless specified in the BDS. Supporting documents and printed literature furnished by the bidder may be in another language provided they are accompanied by an accurate translation of the relevant pages in the English language unless specified in the BDS, in which case, for purposes of interpretation of the bidder, the translation shall govern.

9. **Documents Constituting the Bids**

9.1. The Bids prepared by the Bidder shall constitute of all the documents required in the BDS.

10. **Documents Establishing Eligibility of Material, Equipment and Works, their Conformity to Bidding Documents**

10.1. The bid prepared by the bidder shall constitute the following components: -

10.1.1. Documentary evidence established in accordance with ITB 10 that the material and equipment to be utilized by the Bidder for the executions of works are eligible material and equipment and conform to the Bidding Documents;

10.1.2. Documentary evidence established in accordance with ITB 11 that the bidder has been authorized to carry out the Construction works;

10.1.3. Documentary evidence established in accordance with ITB 11 that the bidder is eligible and/or qualified for the subject bidding process;

10.1.4. Form of Bid and Bid Prices completed in accordance with ITB 12 and 13;

10.1.5. Completed schedules as required, including priced Bill of Quantities in accordance with ITB 13.

10.1.6. Technical Proposal completed in all aspects in accordance with ITB-15.

10.1.7. Bid security or Bid Securing Declaration furnished in accordance with ITB 17;

10.1.8. Any other document required in the BDS.

10.2. In addition to the requirements, bids submitted by a JV shall include a copy of the Joint Venture Agreement entered into by all members. Alternatively, a letter of intent to execute a Joint Venture Agreement in the event of a successful bid shall be signed by all members and submitted with the bid, together with a copy of the proposed Agreement.

10.3. The bidder shall furnish, as part of its bid, all those documents establishing the eligibility in conformity to the terms and conditions specified in the bidding documents for all material, equipment and works which the bidder proposes to execute.

10.4. The documentary evidence of conformity of the material, equipment and works to the Bidding Documents may be in the form of literature, drawings, and data, and shall consist of:

10.4.1. a detailed description of the work methodology, approach, schedule and resources to be mobilized at site;

10.4.2. an item-by-item commentary on the Procuring agency/Employer’s Technical Specifications demonstrating substantial responsiveness of the material, equipment and works to those specifications, or a statement of deviations and exceptions to the provisions of the Technical Specifications;

10.4.3. any other procurement specific documentation requirement as stated in the BDS.

10.5. The required documents and other accompanying documents must be in English. In case any other language than English is used the pertinent translation into English shall be attached to the original version.

11. **Documents Establishing Eligibility and Qualification of the Bidder**

11.1. The bidder shall furnish, as part of its bid, all those documents establishing the bidder's eligibility to participate in the bidding process and/or its qualification to perform the contract if its bid is accepted.

11.2. The documentary evidence of the bidder's eligibility to bid shall establish to the satisfaction of the Procuring agency/Employer that the bidder, at the time of submission of its bid, is from an eligible country as defined in Section-IV titled as "Eligible Countries".

11.3. The documentary evidence of the bidder's qualification to perform the contract if its bid is accepted shall establish to the satisfaction of Procuring agency/Employer that:

11.3.1. The bidder has the financial and technical capability necessary to perform the Contract, meets the qualification criteria specified in Section-V, Evaluation and Qualification Criteria and BDS.

11.3.2. In the case of a bidder not doing business within Pakistan, the bidder is or will be (if awarded the contract) represented by a local bidder (Joint Venture) in accordance with the PEC works bylaws, and in case of award of works such foreign firm is required to participate in the execution of works to carry out its obligations as prescribed in the Conditions of Contract and /or Technical Specifications.

11.3.3. That the bidder meets the qualification criteria listed in Section-V, Evaluation and Qualification Criteria and BDS.

12. **Forms of Bid**

12.1. The Bidder shall fill the Form of Bids furnished in the bidding documents. The Bids Form must be completed without any alterations to its format and no substitute shall be accepted.

13. **Bid Prices**

13.1. The bid prices quoted by the bidder in the Standard bid Forms, Bill of Quantities and in the Price Schedules shall conform to the requirements specified below or exclusively mentioned hereafter in the bidding documents.

13.2. The bidder shall fill in rates and prices for all items of the Works described in the Bill of Quantities. If a Price Schedule shows items listed but not priced, their prices shall be construed to be included in the prices of other items in the Bill of Quantities and will not be paid for separately by the Procuring agency/Employer.

13.3. Items not listed in the Price Schedule shall be assumed not to be included in the bid, and provided that the bid is still substantially responsive in their absence or due to their nominal nature, the corresponding average price of the respective item(s) of the remaining substantially responsive bidder(s) shall be construed to be the price of those missing item(s):
Provided that:

13.3.1. where there is only one (substantially) responsive bidder, or

13.3.2. where there is provision for alternate proposals and the respective items are not listed in the other bids,
The Procuring agency/Employer may fix the price of missing items in accordance with market survey, and the same shall be considered as final price.

13.4. The Bid price to be quoted in the Form of Bid in accordance with ITB 12 shall be the total price of the bid.

13.5. Unless otherwise specified in the BDS and the Contract, the rates and prices quoted by the bidder are subject to adjustment during the performance of the Contract in accordance with the provisions of the

Conditions of Contract.

13.6. If so specified in ITB 1.1, bids may be invited for individual lots (contracts) or for any combination of lots (packages).

13.7. Prices quoted by the Bidder shall be fixed during the bidder's performance of the contract and not subject to variation on any account. A bid submitted with an adjustable price will be treated as non-responsive and shall be rejected, pursuant to ITB 27, unless otherwise price adjustment is permissible under Conditions of the Contract.

13.8. All duties, taxes, and other levies payable by the Contractor under the Contract, or for any other cause, as of the date twenty-eight (28) days prior to the deadline for submission of bids, shall be included in the rates and prices and the total bid price submitted by the bidder.

14. **Currencies of Bid and Payment**

14.1. Prices shall be quoted in Pakistani Rupees unless otherwise specified in the BDS. Comparison of bids and tie of bid shall be treated in accordance with the Rule 30(2) of Public Procurement Rules, 2004.

15. **Documents Comprising the Technical Proposal**

15.1. The bidder shall furnish a Technical Proposal including a statement of work methods, equipment, personnel, schedule and any other information as stipulated in Section VII – Standard Bid Forms, in sufficient detail to demonstrate the adequacy of the bidder's proposal to meet the work requirements and the completion time.

16. **Bid Validity Period**

16.1. Bids shall remain valid for the period specified in the BDS after the bid submission deadline prescribed by the Procuring agency/Employer. A bid valid for a shorter period shall be rejected by the Procuring agency/Employer as non-responsive. The period of bid validity will be determined from the complementary bid securing instrument i.e. the expiry period of bid security or bid securing declaration as the case may be.

16.2. Under exceptional circumstances, prior to the expiration of the initial Bids/Bid validity period, the Procuring Agency may request the Bidders' consent to an extension of the period of validity of their Bids/Bid. Such request for extension of the period of bid validity shall be carried out in accordance with Rule 26 of the Public Procurement Rules, 2004.

17. **Bid Security or Bid Securing Declaration**

17.1. Pursuant to ITB 11.1 unless otherwise specified in the BDS, the bidder shall furnish as part of its bid, a Bid Security in accordance with Rule 25 of the Public Procurement Rules, 2004 in the amount and currency specified in the BDS or Bid Securing Declaration as specified in the BDS in the format provided in Section VII (Standard Bidding Forms).

In case Procuring agency/Employer is inviting bids in lots / packages, the bidder shall be required to submit his bid security against the respective lot/ package for which he is submitting his bid.

Until the development of functionality of auto verification of financial instrument in EPADS, the scanned copy of bid security or bid securing declaration, as the case may be, shall be uploaded on E-PADS whereas the original instrument to be submitted to the procuring agency before closing of bid submission deadline,

17.2. The Bid Security shall be denominated in the local currency or in another freely convertible currency, and it shall be in the form specified in the **BDS** which shall be in any of the following:

17.2.1. A bank guarantee, an irrevocable letter of credit issued by a Scheduled bank in the form provided in the Bidding Documents or another form acceptable to the Procuring agency/Employer and valid for twenty-eight (28) days beyond the end of the validity of the Bid. This shall also apply if the period for Bid Validity is extended. In either case, the form must include the complete name of the bidder;

17.2.2. A cashier's or certified cheque; or

17.2.3. Another security as indicated in the **BDS**.

17.3. The Bid Security or Bid Securing Declaration shall be in accordance with the Form of the Bid Security or Bid Securing Declaration included in Section VII (Standard Bidding Forms) or another form approved by the Procuring agency/Employer prior to the bid submission.

17.4. The Bid Security shall be payable promptly upon written demand by the Procuring agency/Employer in case any of the conditions listed in ITB 17.9 are invoked.

17.5. Any bid not accompanied by a Bid Security or Bid Securing Declaration in accordance with ITB 17.1 or 17.3 shall be rejected by the Procuring agency/Employer and shall be declared as non-responsive bid, pursuant to ITB 27.

17.6. Unsuccessful bidders' Bid Security will be discharged or returned as promptly as possible, however in no case later than thirty (30) days after the expiration of the period of Bid Validity prescribed by the Procuring agency/Employer pursuant to ITB 16. The Procuring agency/Employer shall make no claim to the amount of the Bid Security, and shall promptly return the Bid Security document, after whichever of the following that occurs earliest:

17.6.1. The expiry of the Bid Security;

17.6.2. The entry into force of a procurement contract and the provision of a performance security (or guarantee), for the performance of the contract if such a security (or guarantee), is required by the Biding documents;

17.6.3. The rejection by the Procuring agency/Employer of all Bids;

17.6.4. The withdrawal of the bid prior to the deadline for the submission of bids, unless the biding documents stipulate that no such withdrawal is permitted.

17.7. The successful bidder's Bid Security will be discharged upon the bidder signing the contract pursuant to ITB 40, or furnishing the performance security (or guarantee), pursuant to ITB 41.

17.8. The Bid Security may be forfeited or the Bid Securing Declaration executed:

17.8.1. if a Bidder:

17.8.1.1. Withdraws its Bid during the period of Bid Validity as specified by the Procuring agency/Employer, and referred by the bidder on the Form of Bid except as provided for in ITB 16.2; or

17.8.2. In the case of a successful bidder, if the bidder fails:

17.8.2.1. to sign the contract in accordance with ITB 40; or

17.8.2.2. to furnish performance security (or guarantee) in accordance with ITB 41.

17.9. In case of Bid Security issued by the foreign bank is allowed by the Procuring agency/Employer, the same should be counter guaranteed by a corresponding bank in Pakistan. Furthermore, in case of joint venture, it should be in the name of Joint venture to ensure joint responsibility. In case the JV is not legally constituted at the time of bid submission, the bid security or bid securing declaration shall be in the names of all future members as named in the letter of bid.

18. **Withdrawal of Bids**

18.1. Before bid submission deadline, any bidder may withdraw, substitute, or modify its bid after it has been submitted by sending a written notice, duly signed by an authorized representative, and the corresponding must accompany the respective written notice.

19. **Format and Signing of Bid**

19.1. The Bidder shall prepare and submit Bids through EPADS with due diligence after carefully reading all the terms and condition before bid submission deadline.

D. SUBMISSION OF BIDS

20. **Submission of Bids through EPADS v2.0**

20.1. All bids shall be submitted through EPADS v2.0.

21. **Deadline for Submission of Bids**

21.1. All bids shall be received through **EPADS v2.0** not later than bid submission deadline as specified in the **BDS**.

21.2. The Procuring agency/Employer may, under exceptional circumstances and at its discretion, extend the deadline for the submission of bids, pursuant to Rule 27 of the Public Procurement Rules, 2004. Extension of Time for submission of bid, by amending the Bidding Documents in accordance with ITB 7, in which case all rights and obligations of the Procuring agency/Employer and bidders previously subject to the deadline will thereafter be subject to the new deadline.

22. **Substitution and Modification of bids**

22.1. A bidder may substitute or modify his bid after it has been submitted, provided that written notice of the substitution or modification of the bid, is received by the Procuring agency/Employer prior to the deadline for submission of bids.

22.2. Revised bid may be submitted after the substitution or modification made in the original bid in accordance with the provisions referred in **ITB 18** .

E. OPENING AND EVALUATION OF BIDS

23. **Opening of Bids**

23.1. The Procuring Agency will open bids in accordance with Rule 28 of the Public Procurement Rules, 2004 and as specified in the BDS.

24. **Confidentiality**

24.1. Information relating to the examination, clarification, evaluation and comparison of bids and recommendation of contract award shall not be disclosed to bidders or any other persons not officially concerned with such process until the time of the announcement of the respective evaluation report.

25. **Clarification of Bids**

25.1. Clarification of Bidding Documents shall be carried out in accordance with Rule 31 of the Public Procurement Rules, 2004.

25.2. The alteration or modification in the bid which in any case affect the following parameters will be considered as a change in the substance of a bid:

25.2.1. evaluation & qualification criteria;

25.2.2. required scope of work;

25.2.3. contract price;

25.2.4. all securities requirements;

25.2.5. tax requirements;

25.2.6. terms and conditions of bidding documents.

25.2.7. change in the ranking of the bidder

26. **Preliminary Examination of Bids**

26.1. Prior to the detailed evaluation of bids, the Procuring agency/Employer will determine whether each bid:

26.1.1. meets the eligibility criteria defined in **ITB 3** and **ITB 4**;

26.1.2. has been prepared as per the format and contents defined by the Procuring agency/Employer in the bidding documents;

26.1.3. has been properly signed;

26.1.4. is accompanied by the required securities; and

26.1.5. is substantially responsive to the requirements of the bidding documents.

The Procuring agency/Employer's determination of a bid's substantial responsiveness will be based on the contents of the bid itself.

26.2. A substantially responsive Bid is one which conforms to all the terms, conditions, and specifications of the Bidding Documents, without material deviation or reservation. A material deviation or reservation is one that: -

26.2.1. affects in any substantial way the scope, quality, or performance of the Works;

26.2.2. limits in any substantial way, inconsistent with the bidding documents, the Procuring agency/Employer's rights or the bidders' obligations under the Contract; or

26.2.3. if rectified, would affect unfairly the competitive position of other bidders presenting substantially responsive bids.

26.3. The Procuring agency/Employer will confirm that the documents and information specified under ITB 9, 10 and 11 have been provided in the bid. If any of these documents or information is missing, or is not provided in accordance with the Instructions to Bidders, the bid shall be rejected.

26.4. The Procuring agency/Employer may waive-off any minor informality, nonconformity, or irregularity in a bid which does not constitute a material deviation, provided such waiver does not prejudice or affect the relative ranking of any Bidder.

Explanation: A minor informality, non-conformity or irregularity is one that is merely a matter of form and not of substance. It also pertains to some immaterial defect in a Bid or variation of a bid from the exact requirements of the invitation that can be corrected or waived without being prejudicial to other bidders. The defect or variation is immaterial when the effect on quantity, quality, or delivery is negligible when contrasted with the total cost or scope of the works. The Procuring agency/Employer either shall give the bidder an opportunity to cure any deficiency resulting from a minor

informality or irregularity in a bid or waive the deficiency, whichever is advantageous to the Procuring agency/Employer. Examples of minor informalities or irregularities include failure of a bidder to –

26.4.1. *Submit the number of copies of signed bids required by the invitation;*

26.4.2. *Furnish required information concerning the number of its employees;*

26.4.3. *the firm submitting a bid has formally adopted or authorized, before the date set for opening of bids, the execution of documents by typewritten, printed, or stamped signature and submits evidence of such authorization and the bid carries such a signature.*

26.5. Provided that a Technical Bid is substantially responsive, the Procuring agency/Employer may request the bidder to submit the necessary information or documentation, within a reasonable period of time, to rectify nonmaterial nonconformities or omissions in the Technical Bid related to documentation requirements. Requesting information or documentation on such nonconformities shall not be related to any such aspect of the technical Proposal linked with the ranking of the bidders. Failure of the bidder to comply with the request may result in the rejection of its bid.

26.6. Provided that a Technical Bid is substantially responsive, the Procuring agency/Employer shall rectify quantifiable nonmaterial nonconformities or omissions related to the Financial Proposal. To this effect, the Bid Price shall be adjusted, for comparison purposes only, to reflect the price of the missing or nonconforming item or component.

26.7. If a bid is not substantially responsive, it will be rejected by the Procuring agency/Employer and may not subsequently be evaluated for complete technical responsiveness.

27. **Examination of Terms and Conditions; Technical Evaluation**

27.1. The Procuring agency/Employer shall examine the bid to confirm that all terms and conditions specified in the **GCC** and the **PCC** have been

accepted by the bidder without any material deviation or reservation.

For this purpose:

“Deviation” means departure from the requirements specified in the Bidding Document.

“Reservation” means setting of limiting conditions or withholding from complete acceptance of the requirements specified in the Bidding Document.

27.2. The Procuring agency/Employer shall evaluate the technical aspects of the bid submitted in accordance with ITB 30, to confirm that all requirements specified in Section VI – Works Requirement, Technical Specifications of the Bidding Documents have been met without material deviation or reservation.

27.3. If after the examination of the terms and conditions and the technical evaluation, the Procuring agency/Employer determines that the bid is not substantially responsive in accordance with ITB 27, it shall reject the bid.

28. **Correction of Arithmetic Errors**

28.1. Bids determined to be substantially responsive will be checked for any arithmetic errors. Errors will be corrected as follows: -

28.1.1. if there is a discrepancy between unit prices and the sub-total price that is obtained by multiplying the unit price and quantity, the unit price shall prevail, and the sub-total price shall be corrected, unless in the opinion of the Procuring agency/Employer there is an obvious misplacement of the decimal point in the unit price, in which the total price as quoted shall govern and the unit price shall be corrected;

28.1.2. if there is an error in a total corresponding to the addition or subtraction of sub-totals, the sub-totals shall prevail, and the total shall be corrected; and

28.1.3. where there is a discrepancy between the amounts in figures and in words, the amount in words will govern.

28.1.4. Where there is discrepancy between grand total of price schedule and amount mentioned on the Form of Bid, the amount referred in Price Schedule shall be treated as correct subject to elimination of other errors.

28.2. The amount stated in the Bid will, be rectified by the Procuring agency/Employer in accordance with the above procedure for the correction of errors and, with, the concurrence of the bidder, shall be considered as binding upon the bidder. If the bidder does not accept the corrected amount, its bid shall be rejected after forfeiture of Bid Security or execution of the Bid Securing Declaration, as the case may be, in accordance with **ITB 41.3**.

29. **Conversion to Single Currency**

29.1. The unit rates and the prices shall be quoted by the bidder entirely in Pak rupees. A bidder expecting to incur expenditures in other currencies for inputs to the Works from outside the Procuring agency/Employer's country (referred to as the "Foreign Currency Requirements") shall indicate the same in the letter of bid-financial proposal. The proportion of the Bid Price (excluding Provisional Sums) needed by him for the payment of such Foreign Currency Requirements either (i) entirely in the currency of the Bidder's home country or, (ii) at the bidder's option, entirely in Pak rupees provided always that a bidder expecting to incur expenditures in a currency or currencies other than those stated in (i) and (ii) above for a portion of the foreign currency requirements, and wishing to be paid accordingly, shall indicate the respective portions in his bid. Comparison of bids quoted in different currencies and conversion of bids into a single currency shall be carried out in accordance with Rule 30(2) of the Public Procurement Rules, 2004**.**

30. **Evaluation of Bids**

30.1. The Procuring agency/Employer shall evaluate and compare only the bids determined to be substantially responsive, pursuant to **ITB 27**.

30.2. In evaluating the Technical Proposal of each Bid, the Procuring agency/Employer shall use the criteria and methodologies listed in the BDS

and in terms of works requirement. No other evaluation criteria or methodologies shall be permitted.

30.3. The Procuring agency/Employer's evaluation of a bid will take into account:

30.3.1. the bid price, excluding provisional sums and the provision, if any, for contingencies in the summary bill of quantities, but including day work items, where priced competitively;

30.3.2. converting the amount resulting from applying above, if relevant, to a single currency in accordance with ITB 29;

30.4. The estimated effect of the price adjustment provisions of the Conditions of Contract, applied over the period of execution of the Contract, shall not be taken into account in bid evaluation.

30.5. If these bidding documents allow bidders to quote separate prices for different lots, and the award to a single bidder of multiple lots, the methodology of evaluation to determine the lowest evaluated lot combinations in the Form of Bid, is specified in the **BDS**.

30.6. If the bid, which results in the Evaluated Bid Price (Successful Bid), is seriously unbalanced or front loaded in the opinion of the Employer, the Employer may require the Bidder to produce detailed price analyses for any or all items of the Bill of Quantities, to demonstrate the internal consistency of those prices with the construction methods and schedule proposed. After evaluation of the price analyses, taking into consideration the schedule of estimated Contract payments, the Employer may require that the amount of the performance security be increased at the expense of the Bidder to a level sufficient to protect the Employer against financial loss in the event of default of the successful Bidder under the Contract.

Explanation:

"Unbalanced" or "front-loaded" bids consist of deliberately submitting bids with artificially high prices or unit rates for the early stages of a construction project, offset by artificially low prices or unit rates for the later stages of the project, to improve the contractor's cash flow.

31. **Domestic Preference**

31.1. If the **BDS** so specifies, the Procuring agency/Employer will grant a margin of preference to the domestic contractor in line with the rules, regulations, regulatory guides or instructions issued by the Authority from time to time.

32. **Determination of Successful Bid**

32.1. The Procuring agency/Employer shall compare the evaluated bids in accordance with the predefined bidding procedure, of all substantially responsive bids to determine the Successful bidder.

33. **Qualification of Bidder**

33.1. The Procuring agency/Employer shall determine to its satisfaction whether the bidder is substantially responsive and whose bid is declared as Successful bid either continues to meet (if prequalification applies) or meets (if post-qualification applies) the qualifying criteria specified in Evaluation and Qualification Criteria.
Note: In case of international bidding, the parameters for incorporation or licensing within Pakistan may be fulfilled as part of post qualification.

33.2. The determination shall be based upon an examination of the documentary evidence of the bidder's qualifications submitted by the bidder, pursuant to **ITB 11**.

33.3. Prior to contract award, the Procuring agency/Employer will verify that the successful bidder (including each member of a JV) is not blacklisted/debarred. The Procuring agency/Employer will conduct the same verification for each sub-contractor proposed by the successful bidder.

34. **Sub-Contractors**

34.1. The bidder shall provide details regarding any specialized sub-contractor to the Procuring agency/Employer. In case change of sub-contractors, the bidder shall promptly notify the Procuring agency/Employer and obtain approval for replacement of sub-contractors.

34.2. Bidders may propose sub-contracting up to the percentage of total value of contracts or the volume of works as specified in the **BDS**.

35. **Abnormally Low Financial Bid**

35.1. A procuring Agency may reject abnormally low bids. The decision of the Procuring agency/Employer to reject a bid and reasons for the decision shall be recorded in the procurement proceedings and promptly communicated to the bidder concerned. Moreover, the Procuring agency/Employer shall not incur any liability solely by rejecting abnormally bid

Guidance for Procuring agency/Employer:

An abnormally low bid means, in the light of the Procuring agency/Employer's estimate and of all the bids submitted, the bid appears to be abnormally low by not providing a margin for normal levels of profit. In order to identify the Abnormally Low Bid (ALB) following approaches can be considered to minimize the scope of subjectivity:

35.1.1. Comparing the bid price with the cost estimate;

35.1.2. Comparing the bid price with the bids offered by other bidders submitting substantially responsive bids; and

35.1.3. Comparing the bid price with prices paid in similar contracts in the recent past either government- or development partner-funded.

35.2. The Procuring agency/Employer will determine to its satisfaction whether the bidder that is selected as having submitted the successful bid is qualified to perform the contract satisfactorily, in accordance with the criteria listed in **ITB 11**

35.3. The determination will take into account the bidder's financial and technical capabilities. It will be based upon an examination of the documentary evidence of the bidder's qualifications submitted by the bidder, pursuant to **ITB 11**, as well as such other information as the Procuring agency/Employer deems necessary and appropriate. Factors not included in these bidding documents shall not be used in the evaluation of the bidders' qualifications.

35.4. Procuring agency/Employer may seek “Certificate for Independent Price Determination” from the bidder and the results of reference checks may be used in determining award of contract.

Explanation: The Certificate shall be furnished by the bidder. The bidder shall certify that the price is determined keeping in view of all the essential aspects such as raw material, its processing, value addition, optimization of resources due to economy of scale, transportation, insurance and margin of profit etc.

35.5. An affirmative determination will be a prerequisite for award of the contract to the bidder. A negative determination will result in rejection of the bidder’s bid, in which event the Procuring agency/Employer will proceed to the next ranked bidder to make a similar determination of that bidder’s capabilities to perform satisfactorily.

F. AWARD OF CONTRACT

36. **Criteria of Award**

36.1. Subject to **ITB 36 and 37**, the Procuring agency/Employer will award the Contract to the bidder whose bid has been determined to be substantially responsive to the bidding documents and who has been declared as Successful Bidder, provided that such bidder has been determined to be:

36.1.1. eligible in accordance with the provisions of **ITB 3**;

36.1.2. is determined to be qualified to perform the Contract satisfactorily; and

36.1.3. Successful negotiations have been concluded, if any.

37. **Negotiations**

37.1. The Committee of the Procuring agency/Employer may negotiate with the Most Advantageous Bidder relating to the following areas:

37.1.1. a minor alteration to the technical (drawings, design technical specifications) details of the statement of works;

37.1.2. Methodology, work plan, staffing in view to streamline the work;

37.1.3. a minor amendment to the Particular conditions of Contract;

37.1.4. finalizing payment arrangements;

37.1.5. clarifying details that were not apparent or could not be finalized at the time of Bidding;

37.2. Where negotiation fails to result into an agreement, the Procuring agency/Employer may invite the next ranked bidder for negotiations. Where negotiations are commenced with the next ranked bidder, the Procuring agency/Employer shall not reopen earlier negotiations.

38. **Procuring agency's Right to reject All Bids**

38.1. The procuring agency has the right to reject all bids in accordance with Rule 33 of the Public Procurement Rules, 2004. However, the Authority (i.e. **PPRA**) may call from the Procuring agency/Employer the justification of those grounds.

39. **Notification of Award**

39.1. The procuring agency shall announce and publish the evaluation result in accordance with Rule 35 of the Public Procurement Rules, 2004.

39.2. Where no complaints have been lodged, the bidder whose bid has been accepted will be notified of the award by the Procuring agency/Employer prior to expiration of the bid validity period through EPADS. However, the Procuring agency/Employer shall not award any procurement contract at least for five (05) days after the announcement of final evaluation report. The notification letter (herein after and in the condition of the contract and contract form called “Letter of Acceptance” will specify the sum that the Procuring agency/Employer will pay the successful bidder in consideration for the execution and completion of the

works as prescribed by the Contract (hereinafter and in the Contract called the "Contract Price).

39.3. The notification of award will constitute the formation of the Contract, subject to the bidder furnishing the Performance Security (or guarantee) in accordance with **ITB 41** and signing of the contract in accordance with **ITB 40**.

39.4. Upon the successful bidder's furnishing of the performance security (or guarantee) pursuant to **ITB 41**, the Procuring agency/Employer will promptly notify each unsuccessful bidder, the name of the successful bidder and the Contract amount and will discharge the Bid Security or Bid Securing Declaration of the bidder(s) pursuant to **ITB 17**.

40. **Signing of Contract**

40.1. Promptly after notification of award, Procuring agency/Employer shall send the successful bidder the draft agreement, incorporating all terms and conditions as agreed by the parties to the contract.

40.2. Immediately after the Redressal of grievance by the **GRC**, and after fulfillment of all conditions precedent of the Contract Form, the successful bidder and the Procuring agency/Employer shall sign the contract.

40.3. Where no formal signing of a contract is required, work order issued to the bidder shall be construed to be the contract.

41. **Performance Security (or Guarantee)**

41.1. After the receipt of the Letter of Acceptance, the successful bidder, within the specified time, shall deliver to the Procuring agency/Employer a Performance Guarantee in the amount and in the form stipulated in the BDS and PCC, denominated in the type and proportions of currencies in the Letter of Acceptance and in accordance with the Conditions of Contract.

41.2. If the Performance Guarantee is provided by the successful bidder and it shall be in the form specified in the BDS which shall be in any of the following:

41.2.1. certified cheque, cashier's or manager's cheque, or bank draft;

41.2.2. irrevocable letter of credit issued by a scheduled bank of Pakistan or in the case of an irrevocable letter of credit issued by a foreign bank, the letter shall be confirmed or authenticated by a scheduled bank of Pakistan;

41.2.3. bank guarantee confirmed by a reputable local bank or, in the case of a successful foreign bidder, bonded by a foreign bank; or

41.2.4. surety bond callable upon demand issued by any reputable surety or insurance company.

Any Performance Guarantee submitted shall be enforceable in Pakistan.

41.3. Failure of the Most Advantageous Bidder to comply with the requirement of **ITB 40** shall constitute sufficient grounds for the annulment of the award and forfeiture of the Bid Security or declare blacklisted (in case bid securing declaration is submitted) in which event the Procuring agency/Employer may make the award to the next most advantageous bidder or reinitiate the procurement process afresh (as a case may be).

42. **Advance Payment**

42.1. Advance payment will be provided to the bidder in percentage and in the manner as agreed by the both parties in terms of Conditions of the Contract.

42.2. The Procuring agency/Employer will provide an advance payment as stipulated in the Conditions of Contract, subject to a maximum amount, as stated and/or Conditions of the Contract. The advance payment request shall be accompanied by an advance payment security (guarantee) in the form provided in Section X. For the purpose of receiving the advance payment, the bidder shall make and estimate of, and include in its bid, the expenses that will relate to the purchase of equipment, machinery, materials, and on the engagement of labor during the first month beginning with the date of the Procuring agency/Employer's "**Notice to Commence**" as specified in the **PCC**.

43. **General Performance of the Bidders**

43.1. The Procuring agency/Employer reserves the right to obtain information regarding performance of the bidders on their previously awarded contracts / works. The Procuring agency/Employer may seek information / report from the previous employer for consideration. However, the Procuring agency/Employer shall incorporate such parameters in the evaluation criteria and accordingly decide the fate of the bid submitted.

44. **Corrupt & Fraudulent Practices**

44.1. Procuring agencies (including beneficiaries of Government funded projects and procurement) as well as Bidders/Suppliers/Contractors under Government financed contracts, observe the highest standard of ethics during the procurement and execution of such contracts, and will avoid to engage in any corrupt and fraudulent practices.

G. GRIEVANCE REDRESSAL & COMPLAINT REVIEW MECHANISM

45. **Grievance Redressal**

45.1. Grievance Redressal shall be carried out in accordance with Rule 48 of the Public Procurement Rules, 2004 i.e. Redressal of grievances by the procuring agency and “Redressal of Grievances Regulations 2021”.

H. MECHANISM OF BLACKLISTING

46. **Mechanism of Blacklisting**

46.1. The Procuring agency/Employer shall proceed Blacklisting of Bidders/Contractors in accordance with Rule 19 of the Public Procurement Rules, 2004 i.e. Blacklisting and “Blacklisting and Debarment of Bidders or Contractors Regulations 2024.

Bid Data Sheet

Bids Data Sheet (BDS)

The following specific data for the procurement of Goods to be procured shall complement, supplement, or amend the provisions in the Instructions to Bidders (ITB). Whenever there is a conflict, the provisions herein shall prevail over those in ITB.

BDS Clause Number	ITB Number	Amendments of, and Supplements to, Clauses in the Instruction to Bidders
A. Introduction		
1	**1.1**	Name of Procuring Agency:**SBP BSC Multan (SBP Banking Services Corporation (BSC))** The subject of procurement is:**Structural Strengthening of Annexe Building of SBP BSC Multan** Expected commencement date: **Wednesday, February 17, 2027**
2.	**2.1**	Financial year for the operations of the Procuring Agency:**2026-27** Name and identification number of the Contract: **P113536**
3.	**3.1**	JV/Consortium or AssociationAllowed: **No** Number of JV/Consortium Members: **Nil**
B. Bidding Documents		
4.	**6.2 & 6.4**	The Bidders may seek clarifications through **EPADS v2.0**: Clarification Date: Saturday, November 7, 2026

5.	**7.2**	Any addendum, in case issued, shall be published on **SBP BSC Multan (SBP Banking Services Corporation (BSC))** website and on **EPADS v2.0**.
C. Preparation of Bids		
6.	**8.1**	List of documents required along with the bid: No
7.	**9.1**	The qualification criteria to establish the supply / production capability of the bidder. *see Eligibility Criteria*
8.	**11.2**	**Works and Their relateddocuments:** *See section Required Scope of Work*
9.	**11.1**	Price schedule will be provided according to the format defined and acquired. *see section price schedule.*
10.	**11.4**	**Specifications:** *see section of specifications.*
11.	**11.5 & 13.5**	The price shall be **Fixed**. The bid price shall be adjusted in accordance with Appendix provided – Formula for Price Adjustment.
12.	**14.1**	Currency of the Bids shall be : **PKR**
13.	**16.1**	The Bids/Bid Validity period shall be: **180 Days**

14.	**17.1**	The amount of Bid Security shall be as defined in Bid Security Section for items and lots given in **BDS 6**
15.	**17.2**	The Bid Security shall be in the form of: **Pay Order, Banker's Cheque, Demand Draft**
16.	**15.1**	Alternative Bids to the requirements of the bidding documents willnot be permitted.

D. Submission of Bids

17.	**18.1 & 21.1**	Bid shall be submitted online on EPADS v2.0 whereas hard copy of the bid security should be submitted to the following; **Pul Mouj Darya Road LMQ Road, Multan City, Multan (District), Multan Division (Division), Punjab (Province).** Bids that are not submitted on EPADS v2.0 shall be disqualified. The deadline for Bids submission is: **Tuesday, November 10, 2026 03:00 PM**

E. Opening and Evaluation of Bids

18.	**24.1**	The Bids opening shall take place on **EPADS v2.0**. Day *:* ***Tuesday*** Date:***November 10, 2026*** Time *:* ***03:30 PM***

19.	**30.2**	Selection technique adopted will be: **Least Cost Based Selection (LCBS)** *see Evaluation Criteria*
F. Award of Contract		
20.	**41.1 & 41.2**	The Performance guarantee shall: **10.00%**. The Performance Guarantee shall be acceptable in the form of:**Pay Order, Banker's Cheque, Bank Guarantee, Demand Draft**
21.	**45.1**	Arbitrator shall be appointed by mutual consent of the both parties.
G. Review of Procurement Decisions		
22.	**37**	Grievance against this procurement shall be submitted online on EPADS v2.0.

PUBLIC PROCUREMENT REGULATORY AUTHORITY (PPRA) EPADS

Eligibility Criteria

Eligible Bidders: Individual / Individual Consultant, Sole Proprietorship, Partnership Firm, Company (Private Limited), Company (Public Limited), Company (Holding Company), Company (Limited by Guarantee), State Owned Enterprise (Private Limited), State Owned Enterprise (Public Limited)

Required Registration
FBR (NTN) Punjab (PRA) PEC

Eligibility Criteria	Document
PEC Valid Registration: The bidder should have valid registration with Pakistan Engineering Council at least in Category of C-4 or above with specialization in CE-10.	Yes
Undertaking/Letter of Bid (As per Format attached): The bidder is required to submit an undertaking/letter of bid as per format attached.	Yes
Revenue Authority Registration: The Bidder should be registered with Punjab Revenue Authority (PRA).	Yes
Experience: The bidder has completed/ awarded/ in-hand at least 02 projects pertaining to retrofitting of buildings each of min. cost Rs. 50 M, during last seven (07) years. (Copies of work orders/ completion certificates/ contract agreements or equivalent documents).	Yes

Annual Sales or Turnover of at least Rs.50 M in any of the last five years. Attach Copy(s) of Audited Financial Statements or Income Tax return filed in FBR. OR Bank Credit Line facility amounting to Rs.30 M or above during last one year or Liquid Assets of equivalent amount. OR Financial Capability of Rs.10 M or above.(Submit Bank statement as evidence showing required balance at any one instance in the statement of last three months before date of publication of tender notice)	Yes
The contractor should have experienced Project Manager/ Senior Site Engineer (Civil/ Structural Engineer with 10+ years experience) (Bidder must submit CV)	Yes

PUBLIC PROCUREMENT REGULATORY AUTHORITY (PPRA) EPADS

Evaluation Criteria

Least Cost Based Selection (LCBS)

Weightage

Technical Evaluation %
100

Technical Marks	100
Passing Marks	**100**
Technical Evaluation Criteria	
Experience: The bidder has completed/ awarded/ in-hand at least 02 projects pertaining to retrofitting of buildings each of min. cost Rs. 50 M, during last seven (07) years. (Copies of work orders/ completion certificates/ contract agreements or equivalent documents). (Quantitative)	20
Annual Sales or Turnover of at least Rs.50 M in any of the last five years. Attach Copy(s) of Audited Financial Statements or Income Tax return filed in FBR. OR Bank Credit Line facility amounting to Rs.30 M or above during last one year or Liquid Assets of equivalent amount. OR Financial Capability of Rs.10 M or above.(Submit Bank statement as evidence showing required balance at any one instance in the statement of last three months before date of publication of tender notice) (Quantitative)	20
The contractor should have experienced Project Manager/ Senior Site Engineer (Civil/ Structural Engineer with 10+ years experience) (Bidder must submit CV) (Quantitative)	15

PEC Valid Registration: The bidder should have valid registration with Pakistan Engineering Council at least in Category of C-4 or above with specialization in CE-10. (Quantitative)	15
Undertaking/Letter of Bid (As per Format attached): The bidder is required to submit an undertaking/letter of bid as per format attached. (Quantitative)	15
Revenue Authority Registration: The Bidder should be registered with Punjab Revenue Authority (PRA). (Quantitative)	15

Jobs/Lots

Lot Title : STRUCTURAL STRENGTHENING OF ANNEXE BUILDING

Bid Security : 1500000 PKR

Job	Delivery Schedule	Quantity
Excavation at basement floor	**Address:** Pul Mouj Darya Road LMQ Road, Multan City, Multan (District), Multan Division (Division), Punjab (Province). **Schedule:** 540 Days **Quantity:** 4620/cft	4620/cft
Refilling of excavated area	**Address:** Pul Mouj Darya Road LMQ Road, Multan City, Multan (District), Multan Division (Division), Punjab (Province). **Schedule:** 540 Days **Quantity:** 4620/cft	4620/cft

Job	Delivery Schedule	Quantity
Chipping and roughening of existing RC column - Basement Floor	**Address:** Pul Mouj Darya Road LMQ Road, Multan City, Multan (District), Multan Division (Division), Punjab (Province). **Schedule:** 540 Days **Quantity:** 893/sqft	893/sqft
Application of preparation coat - Basement Floor	**Address:** Pul Mouj Darya Road LMQ Road, Multan City, Multan (District), Multan Division (Division), Punjab (Province). **Schedule:** 540 Days **Quantity:** 893/sqft	893/sqft
Drilling of holes - Basement Floor	**Address:** Pul Mouj Darya Road LMQ Road, Multan City, Multan (District), Multan Division (Division), Punjab (Province). **Schedule:** 540 Days **Quantity:** 211/Qty	211/Qty
Drilling of holes for U bars and L-bar ties at Basement Floor	**Address:** Pul Mouj Darya Road LMQ Road, Multan City, Multan (District), Multan Division (Division), Punjab (Province). **Schedule:** 540 Days **Quantity:** 2619/Qty	2619/Qty
Providing and placing Self-Compacting Concrete at Basement Floor	**Address:** Pul Mouj Darya Road LMQ Road, Multan City, Multan (District), Multan Division (Division), Punjab (Province). **Schedule:** 540 Days **Quantity:** 407/cft	407/cft

Job	Delivery Schedule	Quantity
Providing and applying Sika Monotop or other approved equivalent for top 2’-0” height of RC column jacketing at B Floor	**Address:** Pul Mouj Darya Road LMQ Road, Multan City, Multan (District), Multan Division (Division), Punjab (Province). **Schedule:** 540 Days **Quantity:** 60/cft	60/cft
Reinforcement for RC Column jacketing, Main reinforcement (12-#6)	**Address:** Pul Mouj Darya Road LMQ Road, Multan City, Multan (District), Multan Division (Division), Punjab (Province). **Schedule:** 540 Days **Quantity:** 1530/Kg	1530/Kg
Reinforcement for Main Outer Rings Stirrup reinforcement (#3 @ 5	**Address:** Pul Mouj Darya Road LMQ Road, Multan City, Multan (District), Multan Division (Division), Punjab (Province). **Schedule:** 540 **Quantity:** 537/Kg	537/Kg
Reinforcement for Secondary U/ L-bars reinforcement (#3 @ 5	**Address:** Pul Mouj Darya Road LMQ Road, Multan City, Multan (District), Multan Division (Division), Punjab (Province). **Schedule:** 540 Days **Quantity:** 263/Kg	263/Kg
Providing and applying Sika AnchorFix or other approved equivalent chemical anchoring, For #6 main rebars	**Address:** Pul Mouj Darya Road LMQ Road, Multan City, Multan (District), Multan Division (Division), Punjab (Province). **Schedule:** 540 Days **Quantity:** 13591/ml	13591/ml

Job	Delivery Schedule	Quantity
Chemical anchoring for For #3 secondary U and L-Bars rebars	**Address:** Pul Mouj Darya Road LMQ Road, Multan City, Multan (District), Multan Division (Division), Punjab (Province). **Schedule:** 540 Days **Quantity:** 65830/ml	65830/ml
Chipping and roughening of existing RC column at G floor	**Address:** Pul Mouj Darya Road LMQ Road, Multan City, Multan (District), Multan Division (Division), Punjab (Province). **Schedule:** 540 Days **Quantity:** 502/sqft	502/sqft
Application of preparatory coat at G floor	**Address:** Pul Mouj Darya Road LMQ Road, Multan City, Multan (District), Multan Division (Division), Punjab (Province). **Schedule:** 540 Days **Quantity:** 502/sqft	502/sqft
Drilling of holes for main reinforcement bars (#6) in existing RC slab and foundation, each with 5-inch embedment depth, at G floor	**Address:** Pul Mouj Darya Road LMQ Road, Multan City, Multan (District), Multan Division (Division), Punjab (Province). **Schedule:** 540 Days **Quantity:** 106/Qty	106/Qty
Drilling of holes for U / L-bars ties reinforcement bars (#3) in existing RC columns with 5-inch embedment depth	**Address:** Pul Mouj Darya Road LMQ Road, Multan City, Multan (District), Multan Division (Division), Punjab (Province). **Schedule:** 540 Days **Quantity:** 1605/Qty	1605/Qty

Job	Delivery Schedule	Quantity
Providing and placing Self-Compacting Concrete	**Address:** Pul Mouj Darya Road LMQ Road, Multan City, Multan (District), Multan Division (Division), Punjab (Province). **Schedule:** 540 Days **Quantity:** 239/cft	239/cft
Providing and applying Sika Monotop or other approved equivalent for top 2’-0” height of RC column jacketing at G floor	**Address:** Pul Mouj Darya Road LMQ Road, Multan City, Multan (District), Multan Division (Division), Punjab (Province). **Schedule:** 540 Days **Quantity:** 28/cft	28/cft
Reinforcement for Main reinforcement (12-#6) at G floor	**Address:** Pul Mouj Darya Road LMQ Road, Multan City, Multan (District), Multan Division (Division), Punjab (Province). **Schedule:** 540 Days **Quantity:** 891/Kg	891/Kg
Reinforcement for Main Outer Rings Stirrup reinforcement (#3 @ 5	**Address:** Pul Mouj Darya Road LMQ Road, Multan City, Multan (District), Multan Division (Division), Punjab (Province). **Schedule:** 540 Days **Quantity:** 329/Kg	329/Kg
Reinforcement for Secondary U bars reinforcement (#3 @ 5	**Address:** Pul Mouj Darya Road LMQ Road, Multan City, Multan (District), Multan Division (Division), Punjab (Province). **Schedule:** 540 Days **Quantity:** 153/Kg	153/Kg

Job	Delivery Schedule	Quantity
Providing and applying Sika AnchorFix or other approved equivalent chemical anchoring, For #6 main rebars at G floor	**Address:** Pul Mouj Darya Road LMQ Road, Multan City, Multan (District), Multan Division (Division), Punjab (Province). **Schedule:** 540 Days **Quantity:** 6795/ml	6795/ml
Anchoring chemical for For #3 secondary U rebars at G floor	**Address:** Pul Mouj Darya Road LMQ Road, Multan City, Multan (District), Multan Division (Division), Punjab (Province). **Schedule:** 540 Days **Quantity:** 40347/ml	40347/ml
Chipping and roughening of existing RC column at 1st floor	**Address:** Pul Mouj Darya Road LMQ Road, Multan City, Multan (District), Multan Division (Division), Punjab (Province). **Schedule:** 540 Days **Quantity:** 198/sqft	198/sqft
Application of preparatory coat - at 1st floor	**Address:** Pul Mouj Darya Road LMQ Road, Multan City, Multan (District), Multan Division (Division), Punjab (Province). **Schedule:** 540 Days **Quantity:** 198/sqft	198/sqft
Drilling of holes for main reinforcement bars (#6) in existing RC slab and foundation, each with 5-inch embedment depth at 1st floor	**Address:** Pul Mouj Darya Road LMQ Road, Multan City, Multan (District), Multan Division (Division), Punjab (Province). **Schedule:** 540 Days **Quantity:** 53/Qty	53/Qty

Job	Delivery Schedule	Quantity
Drilling of holes for U bars ties reinforcement bars (#3) in existing RC columns with 5-inch embedment depth at 1st floor	**Address:** Pul Mouj Darya Road LMQ Road, Multan City, Multan (District), Multan Division (Division), Punjab (Province). **Schedule:** 540 Days **Quantity:** 634/Qty	634/Qty
Providing and placing Self-Compacting Concrete at 1st floor	**Address:** Pul Mouj Darya Road LMQ Road, Multan City, Multan (District), Multan Division (Division), Punjab (Province). **Schedule:** 540 Days **Quantity:** 91/cft	91/cft
Providing and applying Sika Monotop or other approved equivalent for top 2’-0” height of RC column jacketing, at 1st floor	**Address:** Pul Mouj Darya Road LMQ Road, Multan City, Multan (District), Multan Division (Division), Punjab (Province). **Schedule:** 540 Days **Quantity:** 14/cft	14/cft
Reinforcement for Main reinforcement (12-#6) at 1st floor	**Address:** Pul Mouj Darya Road LMQ Road, Multan City, Multan (District), Multan Division (Division), Punjab (Province). **Schedule:** 540 Days **Quantity:** 374/Kg	374/Kg
Reinforcement for Main Outer Rings Stirrup reinforcement (#3 @ 5	**Address:** Pul Mouj Darya Road LMQ Road, Multan City, Multan (District), Multan Division (Division), Punjab (Province). **Schedule:** 540 Days **Quantity:** 130/Kg	130/Kg

Job	Delivery Schedule	Quantity
Reinforcement for Secondary U bars reinforcement (#3 @ 5	**Address:** Pul Mouj Darya Road LMQ Road, Multan City, Multan (District), Multan Division (Division), Punjab (Province). **Schedule:** 540 Days **Quantity:** 61/Kg	61/Kg
Providing and applying Sika AnchorFix or other approved equivalent chemical anchoring, For #6 main rebars at 1st floor	**Address:** Pul Mouj Darya Road LMQ Road, Multan City, Multan (District), Multan Division (Division), Punjab (Province). **Schedule:** 540 Days **Quantity:** 3398/ml	3398/ml
Providing and applying Sika AnchorFix or other approved equivalent chemical anchoring, For #3 seciodary U rebars at 1st floor	**Address:** Pul Mouj Darya Road LMQ Road, Multan City, Multan (District), Multan Division (Division), Punjab (Province). **Schedule:** 540 Days **Quantity:** 15927/ml	15927/ml
Chipping and roughening of existing RC column at 2nd floor (RF)	**Address:** Pul Mouj Darya Road LMQ Road, Multan City, Multan (District), Multan Division (Division), Punjab (Province). **Schedule:** 540 Days **Quantity:** 158/sqft	158/sqft
Application of preparatory coat - at 2ndF	**Address:** Pul Mouj Darya Road LMQ Road, Multan City, Multan (District), Multan Division (Division), Punjab (Province). **Schedule:** 540 Days **Quantity:** 158/sqft	158/sqft

Job	Delivery Schedule	Quantity
Drilling of holes for main reinforcement bars (#6) in existing RC slab and foundation, each with 5-inch embedment depth at 2ndF	**Address:** Pul Mouj Darya Road LMQ Road, Multan City, Multan (District), Multan Division (Division), Punjab (Province). **Schedule:** 540 Days **Quantity:** 53/Qty	53/Qty
Drilling of holes for U bars ties reinforcement bars (#3) in existing RC columns with 5-inch embedment depth at 2F	**Address:** Pul Mouj Darya Road LMQ Road, Multan City, Multan (District), Multan Division (Division), Punjab (Province). **Schedule:** 540 Days **Quantity:** 507/Qty	507/Qty
Providing and placing Self-Compacting Concrete at 2F	**Address:** Pul Mouj Darya Road LMQ Road, Multan City, Multan (District), Multan Division (Division), Punjab (Province). **Schedule:** 540 Days **Quantity:** 70/cft	70/cft
Providing and applying Sika Monotop or other approved equivalent for top 2’-0” height of RC column jacketing at 2F	**Address:** Pul Mouj Darya Road LMQ Road, Multan City, Multan (District), Multan Division (Division), Punjab (Province). **Schedule:** 540 Days **Quantity:** 14/cft	14/cft
Reinforcement for Main reinforcement (12-#6) at 2F	**Address:** Pul Mouj Darya Road LMQ Road, Multan City, Multan (District), Multan Division (Division), Punjab (Province). **Schedule:** 540 Days **Quantity:** 320/Kg	320/Kg

Job	Delivery Schedule	Quantity
Reinforcement for Main Outer Rings Stirrup reinforcement (#3 @ 5	**Address:** Pul Mouj Darya Road LMQ Road, Multan City, Multan (District), Multan Division (Division), Punjab (Province). **Schedule:** 540 Days **Quantity:** 104/Kg	104/Kg
Reinforcement for Secondary U bars reinforcement (#3 @ 5	**Address:** Pul Mouj Darya Road LMQ Road, Multan City, Multan (District), Multan Division (Division), Punjab (Province). **Schedule:** 540 Days **Quantity:** 48/Kg	48/Kg
Providing and applying Sika AnchorFix or other approved equivalent chemical anchoring, For #6 main rebars at 2F	**Address:** Pul Mouj Darya Road LMQ Road, Multan City, Multan (District), Multan Division (Division), Punjab (Province). **Schedule:** 540 Days **Quantity:** 3398/ml	3398/ml
Providing and applying Sika AnchorFix or other approved equivalent chemical anchoring,, For #3 secondary U/ L-bars rebars at 2F	**Address:** Pul Mouj Darya Road LMQ Road, Multan City, Multan (District), Multan Division (Division), Punjab (Province). **Schedule:** 540 Days **Quantity:** 12741/ml	12741/ml
Repair and strengthening of RC columns using CFRP wrapping with SikaWrap®-230 C (50 cm width)or other approved equivalent at 2F	**Address:** Pul Mouj Darya Road LMQ Road, Multan City, Multan (District), Multan Division (Division), Punjab (Province). **Schedule:** 540 Days **Quantity:** 176/ft	176/ft

Job	Delivery Schedule	Quantity
Repair and strengthening of RC columns using CFRP wrapping with SikaWrap 230 C (50 cm width) or other approved equivalent at 2F	**Address:** Pul Mouj Darya Road LMQ Road, Multan City, Multan (District), Multan Division (Division), Punjab (Province). **Schedule:** 540 Days **Quantity:** 474/ft	474/ft
Flexural strengthening of RC columns using Sika® CarboDur® S812 (typ.) or other approved equivalent at 2F	**Address:** Pul Mouj Darya Road LMQ Road, Multan City, Multan (District), Multan Division (Division), Punjab (Province). **Schedule:** 540 Days **Quantity:** 2112/ft	2112/ft
Repair and strengthening of RC beams using CFRP wrapping with SikaWrap®-230 C (50 cm width) or other approved equivalent, Beam size 8 x 24	**Address:** Pul Mouj Darya Road LMQ Road, Multan City, Multan (District), Multan Division (Division), Punjab (Province). **Schedule:** 540 Days **Quantity:** 52/ft	52/ft
Repair and strengthening of RC beams using CFRP wrapping with SikaWrap®-600 C (50 cm width) or other approved equivalent, beam size 12x24	**Address:** Pul Mouj Darya Road LMQ Road, Multan City, Multan (District), Multan Division (Division), Punjab (Province). **Schedule:** 540 Days **Quantity:** 106/ft	106/ft
Repair and strengthening of RC beams using CFRP wrapping with SikaWrap®-600 C (50 cm width) or other approved equivalent, beam size 8x30	**Address:** Pul Mouj Darya Road LMQ Road, Multan City, Multan (District), Multan Division (Division), Punjab (Province). **Schedule:** 540 Days **Quantity:** 41/ft	41/ft

Job	Delivery Schedule	Quantity
Flexural strengthening of RC beams using Sika CarboDur S812 (typ.) or other approved equivalent, beam size 8x24	**Address:** Pul Mouj Darya Road LMQ Road, Multan City, Multan (District), Multan Division (Division), Punjab (Province). **Schedule:** 540 Days **Quantity:** 286/ft	286/ft
Flexural strengthening of RC beams using Sika CarboDur S812 (typ.) or other approved equivalent, beam size 12x24	**Address:** Pul Mouj Darya Road LMQ Road, Multan City, Multan (District), Multan Division (Division), Punjab (Province). **Schedule:** 540 Days **Quantity:** 1741/ft	1741/ft
Flexural strengthening of RC beams using Sika CarboDur S812 (typ.) or other approved equivalent, beam size 18x48	**Address:** Pul Mouj Darya Road LMQ Road, Multan City, Multan (District), Multan Division (Division), Punjab (Province). **Schedule:** 540 Days **Quantity:** 1452/ft	1452/ft
Repair and strengthening of RC beams using CFRP wrapping with SikaWrap®-600 C (50 cm width) or other approved equivalent, beam size 12 x24	**Address:** Pul Mouj Darya Road LMQ Road, Multan City, Multan (District), Multan Division (Division), Punjab (Province). **Schedule:** 540 Days **Quantity:** 211/ft	211/ft
Flexural strengthening of RC beams using Sika CarboDur S812 (typ.) or other approved equivalent, beam size 12x24	**Address:** Pul Mouj Darya Road LMQ Road, Multan City, Multan (District), Multan Division (Division), Punjab (Province). **Schedule:** 540 Days **Quantity:** 627/ft	627/ft

Job	Delivery Schedule	Quantity
Surface preparation after CFRP strengethening	**Address:** Pul Mouj Darya Road LMQ Road, Multan City, Multan (District), Multan Division (Division), Punjab (Province). **Schedule:** 540 Days **Quantity:** 31166/sqft	31166/sqft
Providing, mixing and applying, 1/2	**Address:** Pul Mouj Darya Road LMQ Road, Multan City, Multan (District), Multan Division (Division), Punjab (Province). **Schedule:** 540 Days **Quantity:** 31166/sqft	31166/sqft
Providing & applying 03 coats of best quality plastic emulsion paint	**Address:** Pul Mouj Darya Road LMQ Road, Multan City, Multan (District), Multan Division (Division), Punjab (Province). **Schedule:** 540 Days **Quantity:** 31166/sqft	31166/sqft
Repair of Cracks (Type-1)	**Address:** Pul Mouj Darya Road LMQ Road, Multan City, Multan (District), Multan Division (Division), Punjab (Province). **Schedule:** 540 Days **Quantity:** 500/sqft	500/sqft
Repair of Cracks (Type-2)	**Address:** Pul Mouj Darya Road LMQ Road, Multan City, Multan (District), Multan Division (Division), Punjab (Province). **Schedule:** 540 Days **Quantity:** 500/sqft	500/sqft

Job	Delivery Schedule	Quantity
Repair of Cracks (Type-3)	**Address:** Pul Mouj Darya Road LMQ Road, Multan City, Multan (District), Multan Division (Division), Punjab (Province). **Schedule:** 540 Days **Quantity:** 500/sqft	500/sqft
Complete removal/dismantling of existing any type of waterproofing	**Address:** Pul Mouj Darya Road LMQ Road, Multan City, Multan (District), Multan Division (Division), Punjab (Province). **Schedule:** 540 Days **Quantity:** 12000/sqft	12000/sqft
Leveling/repairing of slab surface	**Address:** Pul Mouj Darya Road LMQ Road, Multan City, Multan (District), Multan Division (Division), Punjab (Province). **Schedule:** 540 Days **Quantity:** 12000/sqft	12000/sqft
Making of PCC edge fillet	**Address:** Pul Mouj Darya Road LMQ Road, Multan City, Multan (District), Multan Division (Division), Punjab (Province). **Schedule:** 540 Days **Quantity:** 500/ft	500/ft
Providing and laying of 4 mm thick modified bitumen waterproofing membrane sheet	**Address:** Pul Mouj Darya Road LMQ Road, Multan City, Multan (District), Multan Division (Division), Punjab (Province). **Schedule:** 540 Days **Quantity:** 12000/sqft	12000/sqft

PUBLIC PROCUREMENT REGULATORY AUTHORITY (PPRA) EPADS

Job	Delivery Schedule	Quantity
Providing, mixing, laying, vibrating and curing of Plain Cement Concrete in floor not leaner than 1:3:6 of about maximum 4” thickness	**Address:** Pul Mouj Darya Road LMQ Road, Multan City, Multan (District), Multan Division (Division), Punjab (Province). **Schedule:** 540 Days **Quantity:** 3960/cft	3960/cft
Arranging and installing temporary barricade to act as boundary wal	**Address:** Pul Mouj Darya Road LMQ Road, Multan City, Multan (District), Multan Division (Division), Punjab (Province). **Schedule:** 540 Days **Quantity:** 500/sqft	500/sqft
Careful removal and refixing of HVAC ducts	**Address:** Pul Mouj Darya Road LMQ Road, Multan City, Multan (District), Multan Division (Division), Punjab (Province). **Schedule:** 540 Days **Quantity:** 500/ft	500/ft
Careful removal and refixing of Fire alarm pipes and installation/ alarm points	**Address:** Pul Mouj Darya Road LMQ Road, Multan City, Multan (District), Multan Division (Division), Punjab (Province). **Schedule:** 540 Days **Quantity:** 500/ft	500/ft

Related Services :

No

PUBLIC PROCUREMENT REGULATORY AUTHORITY (PPRA) EPADS

Work Specifications and Market Rates

Lot Title: STRUCTURAL STRENGTHENING OF ANNEXE BUILDING

Specifications / Requirements:

Sr. No	Ref. No.	Description	Unit	Qty	Rate		Amount
1	1	Excavation and Refilling					
2	1a	Excavation at basement floor locations for RC column jacketing, including breaking of existing floor concrete, removal of sub-base material, excavation up to foundation level, disposal of excavated material outside of the Bank premises, and preparation for foundation drilling, complete.	Cu. ft.	4620	121	(Rupees One Hundred Twenty One Only)	559020
3	1b	Refilling of excavated area, compaction of sub-base, and reinstatement of basement floor including concrete screed and floor finishes to original level and condition after completion of column jacketing works, complete.	Cu. ft.	4620	121	(Rupees One Hundred Twenty One Only)	559020
4	2	Reinforced Concrete Jacketting of columns					

Sr. No	Ref. No.	Description	Unit	Qty	Rate		Amount
5		2a. Concrete Jacketing of Columns Below Ground Floor (GF)					
6	2a(i)	Chipping and roughening of existing RC column surface to remove plaster, existing finishes and deleterious/ weak concrete and expose sound concrete, including cleaning of surface and preparation to receive RC jacketing, complete as directed by the Engineer.	Sq. ft.	893	308	(Rupees Three Hundred & Eight Only)	275044
7	2a(ii)	Application of 1 coats of Sika Armatec-110 @03 kg/Sqm or other approved equivalent on surface of the column	Sq. ft.	893	810	(Rupees Eight Hundred & Ninety Three Only)	723330
8	2a(iii)	Drilling of holes for main reinforcement bars (#6) in existing RC slab and foundation, each with 6-inch embedment depth, including cleaning of holes and preparation for chemical anchoring, complete as directed by the Engineer.	Nos.	211	253	(Rupees Two Hundred & Fifty Three Only)	53383

Sr. No	Ref. No.	Description	Unit	Qty	Rate		Amount
9	2a(iv)	Drilling of holes for U bars and L-bar ties reinforcement bars (#3) in existing RC columns with 5-inch embedment depth, including cleaning of holes and preparation for chemical anchoring, complete as directed by the Engineer.	Nos.	2619	220	(Rupees Two Hundred & Twenty Only)	576180
10	2a(v)-i	Providing and placing Self-Compacting Concrete using Ordinary Portland Cement (OPC), small sized aggregate and approved Admixture for RC column jacketing, 5 inches thick, including mixing, placing, compaction, finishing, and curing, complete as per manufacturer’s specifications and Engineer’s approval.	Cu. ft.	407	589	(Rupees Five Hundred & Eighty Nine Only)	239723
11	2a(v)-ii	Providing and applying Sika Monotop or other approved equivalent for top 2’-0” height of RC column jacketing, including surface preparation, mixing, placing, finishing, curing, complete as per manufacturer’s specifications and Engineer’s approval.	Cu. ft.	60	9660	(Rupees Nine Thousand Six Hundred & Sixty Only)	579600

Sr. No	Ref. No.	Description	Unit	Qty	Rate		Amount
12	2a(vi)	Supply, fabrication, and fixing of reinforcement for RC column jacketing, including main vertical bars and lateral ties as per approved drawings and specifications, complete.					
13		(a). Main reinforcement (12-#6)	kg	1530	450	(Rupees Four Hundred & Fifty Only)	688500
14		(b). Main Outer Rings Stirrup reinforcement (#3 @ 5")	kg	537	450	(Rupees Four Hundred & Fifty Only)	241650
15		(c). Secondary U/ L-bars reinforcement (#3 @ 5")	kg	263	450	(Rupees Four Hundred & Fifty Only)	118350
16	2a(vii)	Providing and applying Sika AnchorFix®-2 or other approved equivalent chemical anchoring for reinforcement bars, including cleaning of drilled holes, injection of adhesive, fixing of bars, and all materials and workmanship complete as per manufacturer’s specifications.					

Sr. No	Ref. No.	Description	Unit	Qty	Rate		Amount
17		(a). For #6 main rebars	mls	13591	40	(Rupees Forty Only)	543640
18		(b). For #3 secondary U and L-Bars rebars	mls	65830	40	(Rupees Forty Only)	2633200
19		2b. Jackets Below First Floor (1F)					
20	2b(i)	Chipping and roughening of existing RC column surface to remove plaster/weak concrete and expose sound concrete, including cleaning of surface and preparation to receive RC jacketing, complete as directed by the Engineer.	Sq. ft.	502	308	(Rupees Three Hundred & Eight Only)	154616
21	2b(ii)	Application of 1 coats of Sika Armatec 110 @03 kg/Sqm or other approved equivalent on surface of the column	Sq. ft.	502	578	(Rupees Five Hundred & Seventy Eight Only)	290156

Sr. No	Ref. No.	Description	Unit	Qty	Rate		Amount
22	2b(iii)	Drilling of holes for main reinforcement bars (#6) in existing RC slab and foundation, each with 5-inch embedment depth, including cleaning of holes and preparation for chemical anchoring, complete as directed by the Engineer.	Nos.	106	253	(Rupees Two Hundred & Fifty Three Only)	26818
23	2b(iv)	Drilling of holes for U / L-bars ties reinforcement bars (#3) in existing RC columns with 5-inch embedment depth, including cleaning of holes and preparation for chemical anchoring, complete as directed by the Engineer.	Nos.	1605	220	(Rupees Two Hundred & Twenty Only)	353100
24	2b(v)-i	Providing and placing Self-Compacting Concrete using Ordinary Portland Cement (OPC), small sized aggregate and approved Admixture for RC column jacketing, 5 inches thick, including mixing, placing, compaction, finishing, and curing, complete as per manufacturer’s specifications and Engineer’s approval.	Cu. ft.	239	589	(Rupees Five Hundred & Eighty Nine Only)	140771

Sr. No	Ref. No.	Description	Unit	Qty	Rate		Amount
25	2b(v)-ii	Providing and applying Sika Monotop or other approved equivalent for top 2’-0” height of RC column jacketing, including surface preparation, mixing, placing, finishing, curing, complete as per manufacturer’s specifications and Engineer’s approval.	Cu. ft.	28	9660	(Rupees Nine Thousand Six Hundred & Sixty Only)	270480
26	2b(vi)	Supply, fabrication, and fixing of reinforcement for RC column jacketing, including main vertical bars and lateral ties as per approved drawings and specifications, complete.					
27		(a). Main reinforcement (12-#6)	kg	891	450	(Rupees Four Hundred & Fifty Only)	400950
28		(b). Main Outer Rings Stirrup reinforcement (#3 @ 5")	kg	329	450	(Rupees Four Hundred & Fifty Only)	148050
29		(c). Secondary U bars reinforcement (#3 @ 5")	kg	153	450	(Rupees Four Hundred & Fifty Only)	68850

Sr. No	Ref. No.	Description	Unit	Qty	Rate		Amount
30	2b(vii)	Providing and applying Sika AnchorFix®-2 or other approved equivalent chemical anchoring for reinforcement bars, including cleaning of drilled holes, injection of adhesive, fixing of bars, and all materials and workmanship complete as per manufacturer’s specifications.					
31		(a). For #6 main rebars	mls	6795	40	(Rupees Forty Only)	271800
32		(b). For #3 secondary U rebars	mls	40347	40	(Rupees Forty Only)	1613880
33		2c. Jackets Below Second Floor (2F)					
34	2c(i)	Chipping and roughening of existing RC column surface to remove plaster/weak concrete and expose sound concrete, including cleaning of surface and preparation to receive RC jacketing, complete as directed by the Engineer.	Sq. ft.	198	308	(Rupees Three Hundred & Eight Only)	60984

Sr. No	Ref. No.	Description	Unit	Qty	Rate		Amount
35	2c(ii)	Application of 1 coats of Sika Armatec 110 @03 kg/Sqm or other approved equivalent on surface of the column	Sq. ft.	198	578	(Rupees Five Hundred & Seventy Eight Only)	114444
36	2c(iii)	Drilling of holes for main reinforcement bars (#6) in existing RC slab and foundation, each with 5-inch embedment depth, including cleaning of holes and preparation for chemical anchoring, complete as directed by the Engineer.	Nos.	53	253	(Rupees Two Hundred & Fifty Three Only)	13409
37	2c(iv)	Drilling of holes for U bars ties reinforcement bars (#3) in existing RC columns with 5-inch embedment depth, including cleaning of holes and preparation for chemical anchoring, complete as directed by the Engineer.	Nos.	634	220	(Rupees Two Hundred & Twenty Only)	139480

Sr. No	Ref. No.	Description	Unit	Qty	Rate		Amount
38	2c(v)-i	Providing and placing Self-Compacting Concrete using Ordinary Portland Cement (OPC), small sized aggregate and approved Admixture for RC column jacketing, 5 inches thick, including mixing, placing, compaction, finishing, and curing, complete as per manufacturer’s specifications and Engineer’s approval.	Cu. ft.	91	589	(Rupees Five Hundred & Eighty Nine Only)	53599
39	2c(v)-ii	Providing and applying Sika Monotop or other approved equivalent for top 2’-0” height of RC column jacketing, including surface preparation, mixing, placing, finishing, curing, complete as per manufacturer’s specifications and Engineer’s approval.	Cu. ft.	14	9660	(Rupees Nine Thousand Six Hundred & Sixty Only)	135240
40	2c(vi)	Supply, fabrication, and fixing of reinforcement for RC column jacketing, including main vertical bars and lateral ties as per approved drawings and specifications, complete.					
41		(a). Main reinforcement (12-#6)	kg	374	450	(Rupees Four Hundred & Fifty Only)	168300

Sr. No	Ref. No.	Description	Unit	Qty	Rate		Amount
42		(b). Main Outer Rings Stirrup reinforcement (#3 @ 5")	kg	130	450	(Rupees Four Hundred & Fifty Only)	58500
43		(c). Secondary U bars reinforcement (#3 @ 5")	kg	61	450	(Rupees Four Hundred & Fifty Only)	27450
44	2c(vii)	Providing and applying Sika AnchorFix®-2 or other approved equivalent chemical anchoring for reinforcement bars, including cleaning of drilled holes, injection of adhesive, fixing of bars, and all materials and workmanship complete as per manufacturer’s specifications.					
45		(a). For #6 main rebars	mls	3398	40	(Rupees Forty Only)	135920
46		(b). For #3 secindary U rebars	mls	15927	40	(Rupees Forty Only)	637080
47		2d. Jackets Below Roof Floor (RF)					

Sr. No	Ref. No.	Description	Unit	Qty	Rate		Amount
48	2d(i)	Chipping and roughening of existing RC column surface to remove plaster/weak concrete and expose sound concrete, including cleaning of surface and preparation to receive RC jacketing, complete as directed by the Engineer.	Sq. ft.	158	308	(Rupees Three Hundred & Eight Only)	48664
49	2d(ii)	Application of 1 coats of Sika Armatec 110 @03 kg/Sqm or other approved equivalent on surface of the column	Sq. ft.	158	578	(Rupees Five Hundred & Seventy Eight Only)	91324
50	2d(iii)	Drilling of holes for main reinforcement bars (#6) in existing RC slab and foundation, each with 5-inch embedment depth, including cleaning of holes and preparation for chemical anchoring, complete as directed by the Engineer.	Nos.	53	253	(Rupees Two Hundred & Fifty Three Only)	13409
51	2d(iv)	Drilling of holes for U bars ties reinforcement bars (#3) in existing RC columns with 5-inch embedment depth, including cleaning of holes and preparation for chemical anchoring, complete as directed by the Engineer.	Nos.	507	220	(Rupees Two Hundred & Twenty Only)	111540

Sr. No	Ref. No.	Description	Unit	Qty	Rate		Amount
52	2d(v)-i	Providing and placing Self-Compacting Concrete using Ordinary Portland Cement (OPC), small sized aggregate and approved Admixture for RC column jacketing, 5 inches thick, including mixing, placing, compaction, finishing, and curing, complete as per manufacturer’s specifications and Engineer’s approval.	Cu. ft.	70	589	(Rupees Five Hundred & Eighty Nine Only)	41230
53	2d(v)-ii	Providing and applying Sika Monotop or other approved equivalent for top 2’-0” height of RC column jacketing, including surface preparation, mixing, placing, finishing, curing, complete as per manufacturer’s specifications and Engineer’s approval.	Cu. ft.	14	9660	(Rupees Nine Thousand Six Hundred & Sixty Only)	135240
54	2d(vi)	Supply, fabrication, and fixing of reinforcement for RC column jacketing, including main vertical bars and lateral ties as per approved drawings and specifications, complete.					
55		(a). Main reinforcement (12-#6)	kg	320	450	(Rupees Four Hundred & Fifty Only)	144000

Sr. No	Ref. No.	Description	Unit	Qty	Rate		Amount
56		(b). Main Outer Rings Stirrup reinforcement (#3 @ 5")	kg	104	450	(Rupees Four Hundred & Fifty Only)	46800
57		(c). Secondary U bars reinforcement (#3 @ 5")	kg	48	450	(Rupees Four Hundred & Fifty Only)	21600
58	2d(vii)	Providing and applying Sika AnchorFix®-2 or other approved equivalent chemical anchoring for reinforcement bars, including cleaning of drilled holes, injection of adhesive, fixing of bars, and all materials and workmanship complete as per manufacturer’s specifications.					
59		(a). For #6 main rebars	mls	3398	40	(Rupees Forty Only)	135920
60		(b). For #3 secondary U/ L-bars rebars	mls	12741	40	(Rupees Forty Only)	509640
61	3	Existing RC Column CFRP Confinement and Flexural Repair					

Sr. No	Ref. No.	Description	Unit	Qty	Rate		Amount
62		3a. Repair of Columns below Ground Floor (GF)					
63			ft				
64		3b. Repair of Columns below First Floor (1F)					
65			ft				
66		3c. Repair of Columns below Second Floor (2F)					
67	3c (i)	Repair and strengthening of RC columns using CFRP wrapping with SikaWrap®-230 C (50 cm width)or other approved equivalent, including surface preparation, epoxy system application, fabric wrapping, protective coating, and all materials, labor, and workmanship complete as per specifications.	ft	176	4500	(Rupees Four Thousand & Five Hundred Only)	792000
68		3d. Repair of Columns below Roof Floor (RF)					
69	3d (i)	Repair and strengthening of RC columns using CFRP wrapping with SikaWrap®-230 C (50 cm width) or other approved equivalent, including surface preparation, epoxy system application, fabric wrapping, protective coating, and all materials, labor, and workmanship complete as per specifications.	ft	474	4500	(Rupees Four Thousand & Five Hundred Only)	2133000

Sr. No	Ref. No.	Description	Unit	Qty	Rate		Amount
70	3d (ii)	Flexural strengthening of RC columns using Sika® CarboDur® S812 (typ.) or other approved equivalent, including surface preparation, application of epoxy adhesive, fixing and alignment of CFRP laminate strips, anchorage/termination detailing, and all materials, labor, and workmanship complete as per manufacturer's specifications and engineer's approval.	ft	2112	5865	(Rupees Five Thousand Eight Hundred & Sixty Five Only)	12386880
71	4	Existing RC Beams CFRP Shear and Flexural Repair					
72		4a. Repair of shear strengthening of Beams of size 8 x 24					
73	4a (i)	Repair and strengthening of RC beams using CFRP wrapping with SikaWrap®-230 C (50 cm width) or other approved equivalent, including surface preparation, epoxy system application, fabric wrapping, protective coating, and all materials, labor, and workmanship complete as per specifications.	ft	52	4500	(Rupees Four Thousand & Five Hundred Only)	234000
74		4b. Repair of shear strengthening of Beams of size 12 x 24					

Sr. No	Ref. No.	Description	Unit	Qty	Rate		Amount
75	4b (i)	Repair and strengthening of RC beams using CFRP wrapping with SikaWrap®-600 C (50 cm width) or other approved equivalent, including surface preparation, epoxy system application, fabric wrapping, protective coating, and all materials, labor, and workmanship complete as per specifications.	ft	106	5765	(Rupees Five Thousand Seven Hundred & Sixty Five Only)	611090
76		4c. Repair of shear strengthening of Beams of size 8 x 30					
77	4c (i)	Repair and strengthening of RC beams using CFRP wrapping with SikaWrap®-600 C (50 cm width) or other approved equivalent, including surface preparation, epoxy system application, fabric wrapping, protective coating, and all materials, labor, and workmanship complete as per specifications.	ft	41	5765	(Rupees Five Thousand Seven Hundred & Sixty Five Only)	236365
78		4d. Repair of flexural strengthening of Beams of size 8 x 24					

Sr. No	Ref. No.	Description	Unit	Qty	Rate		Amount
79	4d (i)	Flexural strengthening of RC beams using Sika® CarboDur® S812 (typ.) or other approved equivalent, including surface preparation, application of epoxy adhesive, fixing and alignment of CFRP laminate strips, anchorage/termination detailing, and all materials, labor, and workmanship complete as per manufacturer’s specifications and engineer’s approval.	ft	286	5765	(Rupees Five Thousand Seven Hundred & Sixty Five Only)	1648790
80		4e. Repair of flexural strengthening of Beams of size 12 x 24					
81	4e (i)	Flexural strengthening of RC beams using Sika® CarboDur® S812 (typ.) or other approved equivalent, including surface preparation, application of epoxy adhesive, fixing and alignment of CFRP laminate strips, anchorage/termination detailing, and all materials, labor, and workmanship complete as per manufacturer’s specifications and engineer’s approval.	ft	1741	5765	(Rupees Five Thousand Seven Hundred & Sixty Five Only)	10036865
82		4f. Repair of flexural strengthening of Beams of size 18 x 48					

Sr. No	Ref. No.	Description	Unit	Qty	Rate		Amount
83	4f (i)	Flexural strengthening of RC beams using Sika® CarboDur® S812 (typ.) or other approved equivalent, including surface preparation, application of epoxy adhesive, fixing and alignment of CFRP laminate strips, anchorage/termination detailing, and all materials, labor, and workmanship complete as per manufacturer's specifications and engineer's approval.	ft	1452	5765	(Rupees Five Thousand Seven Hundred & Sixty Five Only)	8370780
84		4g. Repair of combined flexural+shear strengthening of Beams of size 12 x 24					
85	4g (i)	Repair and strengthening of RC beams using CFRP wrapping with SikaWrap®-600 C (50 cm width) or other approved equivalent, including surface preparation, epoxy system application, fabric wrapping, protective coating, and all materials, labor, and workmanship complete as per specifications.	ft	211	6900	(Rupees Six Thousand & Nine Hundred Only)	1455900

Sr. No	Ref. No.	Description	Unit	Qty	Rate		Amount
86	4g (ii)	Flexural strengthening of RC beams using Sika® CarboDur® S812 (typ.) or other approved equivalent, including surface preparation, application of epoxy adhesive, fixing and alignment of CFRP laminate strips, anchorage/termination detailing, and all materials, labor, and workmanship complete as per manufacturer's specifications and engineer's approval.	ft	627	5765	(Rupees Five Thousand Seven Hundred & Sixty Five Only)	3614655
87	5	Architectural Restoration of columns repaired with CFRP, columns repaired with RC Jacket, RC Beams after CFRP strengthening, including surface finishing, plaster/putty, texture matching, painting or final finish to match existing architectural appearance, complete.					
88	5a	Surface preparation after CFRP strengethening including application of required adhesive and or steel wire mesh to make bond with plaster works complete in all respects as per site requirements and as directed by the Engineer In-Charge.	Sq. ft.	31166	15	(Rupees Fifteen Only)	467490

Sr. No	Ref. No.	Description	Unit	Qty	Rate		Amount
89	5b	Providing, mixing and applying, 1/2" to 3/4" thick 1:4 cement-sand plaster over internal walls, columns, beams, and ceilings smooth finished with steel trowel as per proper lines & plumb to the entire satisfaction of the Engineer In-Charge, using clean river/quarry sand of approved quality and OP cement, including cost of required scaffolding, making of jambs and edges for openings where required, curing, etc. complete in all respects as per site requirements and as directed by the Engineer In-Charge.	Sq. ft.	31166	60	(Rupees Sixty Only)	1869960
90	5c	Providing & applying 03 coats of best quality plastic emulsion paint of ICI Dulux or equivalent make over walls & ceiling including surface preparation with approved quality wall putty and one coat of primer of ICI Dulux or other approved equivalent make, sand papering where required, complete in all respects as per site requirements and as directed by the Engineer In-Charge.	Sq. ft.	31166	75	(Rupees Seventy Five Only)	2337450
91	6	Repair of various cracks in Walls of the Building					

Sr. No	Ref. No.	Description	Unit	Qty	Rate		Amount
92	6a	Repair of cracks in walls by opening and cleaning of cracks, fixing galvanized wire mesh over affected area with proper anchorage, application of bonding agent, and plastering with cement sand mortar to match existing surface, including finishing, curing, scaffolding, labor, material, complete in all respects as per drawings and Engineer’s instructions. There are three types of crack repair methods, as shown on the drawings.					
93		Repair of Cracks (Type-1)	Sq. ft.	500	150	(Rupees One Hundred & Fifty Only)	75000
94		Repair of Cracks (Type-2)	Sq. ft.	500	200	(Rupees Two Hundred Only)	100000
95		Repair of Cracks (Type-3)	Sq. ft.	500	300	(Rupees Three Hundred Only)	150000
96	7	Water Proofing Works at Rooftop					

Sr. No	Ref. No.	Description	Unit	Qty	Rate		Amount
97	7a	Complete removal/dismantling of existing any type of waterproofing treatment from the rooftop to expose the slab. Also including the cost of complete scrapping of the surface using steel wire brush etc. and making the surface ready for application of new primer and waterproofing sheets.The surface is thoroughly cleaned & surveyed to locate any visible cracks etc. These cracks are to be sealed with Sikadur-20 crackseal of Sika or other approved equivalent. Stacking of all debris at designated place inside the Bank and disposal of the debris away from the Bank Premises. Complete in all respects as per site requirements and as directed by the engineer in-charge.	Sq. ft.	12000	8	(Rupees Eight Only)	96000

PUBLIC PROCUREMENT REGULATORY AUTHORITY (PPRA) EPADS

Sr. No	Ref. No.	Description	Unit	Qty	Rate		Amount
98	7b	Leveling/repairing of slab surface with about ¾” average thick layer of slurry comprising of Cement + Sand (in 1:4 ratio) using latex based concrete bonding agent from Sika, Fospak or other approved manufacturer @ 3 liters per bag of cement or as per the directions of the manufacturer/ supplier, with smooth trowel finished top surface, curing with damp jute cloth.To prevent shrinkage cracks etc. mono filament polypropylene fibers can also be mixed in slurry @ about 100-150 grams per bag of cement. The fibers can be 12mm or 19mm long, complete in all respects as per site requirements and as directed by the Engineer In-charge	Sq. ft.	12000	100	(Rupees One Hundred Only)	1200000

Sr. No	Ref. No.	Description	Unit	Qty	Rate		Amount
99	7c	Making of PCC edge fillet (triangular/parabolic shape gola) of approximately 4” x 4” size along the parapet walls with cement-sand mortar in 1: 4 ratio using latex based concrete bonding agent from Sika, Fospak or other approved manufacturer @ 3 liters per bag of cement or as per the directions of the manufacturer/ supplier, and approved water repellent admixture, with smooth trowel finished top surface, curing with damp jute cloth, complete in all respects as per site requirements and as directed by the Engineer In-charge.	Rft	500	150	(Rupees One Hundred & Fifty Only)	75000

PUBLIC PROCUREMENT REGULATORY AUTHORITY (PPRA) EPADS

Sr. No	Ref. No.	Description	Unit	Qty	Rate		Amount
100	7d	Providing and laying of 4 mm thick modified bitumen waterproofing membrane sheet of Hy-grip, Roofgrip or other approved equivalent brand at the rooftop. Including the cost of application of approved quality primer (Oil Based Primer of Hy-Grip or other approved equivalent) applied @ about 4m2/liter before laying of bitumen sheets. All required overlaps of minimum 4” width. A groove of about 1”x1” size is made in the peripheral or parapet walls. Ends of the waterproofing membrane are anchored in this groove with the help of aluminum u-channel and stainless screws. Then the groove is filled with cement sand mortar etc.The membrane shall be extended up to 2" on walls on all sides of the roof. Payment will be made for the Covered area of roof. A layer of about 200micron thick polythene sheet is placed over the waterproofing membrane, Complete in all respects as per site requirements and as directed by the engineer in-charge	Sq. ft.	12000	450	(Rupees Four Hundred & Fifty Only)	5400000

Sr. No	Ref. No.	Description	Unit	Qty	Rate		Amount
101	7e	Providing, mixing, laying, vibrating and curing of Plain Cement Concrete in floor not leaner than 1:3:6 of about maximum 4” thickness, laid according to proper slopes & levels, including the cost of providing & mixing poly propylene fiber in recommended quantity (by manufacturer) of Sika, ICPL, Pagel or other approved equivalent make @ 150 grams per bag of cement or as per manufacturer, complete in all respects as per site requirements and as directed by the Engineer In-charge. The concrete will be laid in 8 x8 feet alternate pannels. 1/2 " thick Thermopore will be used as gap between pannels. Top 1/2 inch of thermopore will be removed later to fill with approved PU based joint sealent, complete in all respects as per site requirements and as directed by the Engineer In-charge.	Cft.	3960	800	(Rupees Eight Hundred Only)	3168000
102	8	Miscellaneous Works					

Sr. No	Ref. No.	Description	Unit	Qty	Rate		Amount
103	8a	Arranging and installing temporary barricade to act as boundary wall till completion of repair works in the designated area as per satisfaction of Engineer In charge. The barricade structure includes corrugated sheets of 18SWG supported by the scaffolding pipes at appropriate spacing upto height as directed by the Engineer In Charge. Complete in all respects as per site requirements and as directed by the Engineer In- charge. Note: The same barricade shall be removed after necessary completion of work and approval of Engineer. The same barricade will be property of contractor after removal from site.	Sq.ft.	500	400	(Rupees Four Hundred Only)	200000
104	8b	Careful removal of HVAC ducts complete in all respects as per directions of the Engineer In Charge to execute the rectification works on columns and beams and refixing of the same complete in all respects and or as directed by the Engineer In Charge. This includes the cost of all allied accessories, labour etc complete in all respetcts required to refix the HVAC ducts as per satisfaction of the Engineer (E&M)	ft	500	250	(Rupees Two Hundred & Fifty Only)	125000

Sr. No	Ref. No.	Description	Unit	Qty	Rate		Amount
105	8c	Careful removal of Fire alarm pipes and installation/ alarm points complete in all respects as per directions of the Engineer In Charge to execute the rectification works on columns and beams and refixing of the same complete in all respects and or as directed by the Engineer In Charge. This includes the cost of all allied accessories, labour etc complete in all respetcts required to refix the fire alarm pipes and alarm points etc as per satisfaction of the Engineer (E&M)	ft	500	250	(Rupees Two Hundred & Fifty Only)	125000
106		Summary of BOQ					
107	Sr. No.	ITEM					TOTAL
108	1						
109	2a						
110	2b						
111	2c						
112	2d						
113	3						
114	4						

Sr. No	Ref. No.	Description	Unit	Qty	Rate		Amount
115	5						
116	6						
117	7						
118	8						
119		TOTAL					
						GRAND TOTAL:	Rs71,283,109.00

PUBLIC PROCUREMENT REGULATORY AUTHORITY (PPRA) EPADS

Scope of Work

The scope of works includeExcavation and Refilling,Reinforced Concrete Jacketting of columns,Existing RC Column CFRP Confinement and Flexural Repair,Existing RC Beams CFRP Shear and Flexural Repair,Architectural Restoration of columns repaired with CFRP, columns repaired with RC Jacket, RC Beams after CFRP strengthening, including surface finishing, plaster/putty, texture matching, painting or final finish to match existing architectural appearance,Repair of various cracks in Walls of the Building,Water Proofing Works at Rooftop,Miscellaneous Works including barricae works, removal and refitting of fire alarm piping and installations and HVAC ducts etc. where required.

PUBLIC PROCUREMENT REGULATORY AUTHORITY (PPRA) EPADS

Price Schedule

For Individual Jobs

#	Job Title	Quantity	Unit Price (PKR)	Total Price (PKR)	Delivery Location	Delivery Period / Year	Country of Origin
1							
2							

For Lots

#	Lot Title	Total Lot Price (PKR)	Country of Origin
1	[Lot 1 Title]		

PUBLIC PROCUREMENT REGULATORY AUTHORITY
(PPRA)
EPADS

General Conditions of Contract

A. General

1. **Definitions**

1.1. Unless the context otherwise requires, the following terms whenever used in this Contract shall have the same meaning and shall be interpreted as indicated

1.1.1. “Applicable Law” means the laws and any other instruments having the force of law in the Government’s Country, or in such other country as may be specified in the Special Conditions of the Contract (SC), as they may be issued and in force from time to time;

1.1.2. “The Contract” means an agreement enforceable by law;

1.1.3. “The Contract Price” means the price payable to the Contractor under the Contract for the full and proper performance of its contractual obligations;

1.1.4. “The Services” means the work to be performed by the Contractor pursuant to this Contract and as prescribed in the Specifications and Schedule of Activities included in the Contractor’s Bid;

1.1.5. “Ancillary Services” means those services ancillary to the provision of Services, such as transportation and insurance, and any other incidental services, such as installation, commissioning, provision of technical assistance, training, and other such obligations of the Contractor covered under the Contract;

1.1.6. “GCC” means the General Conditions of Contract contained in this section;

1.1.7. “SCC” means the Special Conditions of Contract by which the GCC may be amended or supplemented;

1.1.8. **“**Day” means calendar day unless indicated otherwise;

1.1.9. “Effective Date” means the date on which this Contract comes into force and effect;

1.1.10. “The Contractor” means the individual or corporate body whose Bids to provide the Services has been accepted by the Procuring Agency;

1.1.11. “The Project Site,” where applicable, means the place or places named in Bid Data Sheet and technical Specifications;

1.1.12. “Government” means the Government of Pakistan;

1.1.13. “Local Currency” means the currency of Pakistan;

1.1.14. “In Writing” means communicated in written form with proof of receipt;

1.1.15. “Completion Date” means the date of completion of the Services by the Contractor as certified by the Procuring Agency;

1.1.16. “Foreign Currency” means any currency other than the currency of the country of the Procuring Agency;

1.1.17. “Party” means the Procuring Agency or the Contractor, as the case may be, and “Parties” means both of them;

1.1.18. "Service" means any object of procurement other than goods or works;

1.1.19. “Subcontractor” means any entity to which the Bidder subcontracts any part of the Services.

2. **Applicable Law**

2.1. The contract shall be governed and interpreted in accordance with the laws of Pakistan, unless otherwise specified in SCC.

3. **Language**

3.1. The Contract as well as all correspondence and documents relating to the Contract exchanged between the Contractorand the Procuring Agency, shall be written in the **English language** unless otherwise stated in the **SCC** . Supporting documents and printed literature that are part of the Contract may be in another language provided these are accompanied by an accurate translation of the relevant passages in English, in which case, for purposes of interpretation of the Contract, this translation shall govern.

4. **Notices**

4.1. Any notice, request, or consent made pursuant to this Contract shall be in writing and shall be deemed to have been made when delivered in person to an authorized representative of the Party to whom the communication is addressed, or when sent by registered mail, telex, telegram, or facsimile to such Party at the address specified in the **SCC**.

5. **Location**

5.1. The Services shall be performed at such locations as the Procuring Agency may approve and as specified in **SCC.**

5.2. A {DOCUMENTS}

6. **Authorized Representatives / Authority of Member in charge**

6.1. Any action required or permitted to be taken, and any document required or permitted to be executed, under this Contract by the Procuring Agency or the Contractor may be taken or executed by the officials specified in the **SCC**.

B. Commencement, Completion, Modification, and Termination of Contract

7. **Effectiveness of Contract**

7.1. This Contract shall come into effect on the date the Contract is signed by both parties and such other later date as may be stated in the **SCC.**

8. **Commencement of Services**

8.1. The Contractor shall confirm availability of Key Experts and begin carrying out the Services not later than the number of days after the Effective Date specified in the **SCC.**

9. **Program schedule**

9.1. Before commencement of the Services, the Contractor shall submit to the Procuring Agency for approval a Program showing the general methods, arrangements, order and timing for all activities. The Services shall be carried out in accordance with the approved Program as updated.

10. **Starting Date/Expiration Date**

10.1. The Contractor shall start carrying out the Services Five (05) days after the date the Contract becomes effective, or at such other date as may be specified in the **SCC.**

10.2. Unless terminated earlier pursuant to Clause **GCC 14** hereof, this Contract shall expire at the end of such time period after the Effective Date as specified in the **SCC.**

11. **Entire Agreement**

11.1. This Contract contains all covenants, stipulations and provisions agreed by the Parties. No agent or representative of either Party has authority to make, and the Parties shall not be bound by or be liable for, any statement, representation, promise or agreement not set forth herein.

12. **Modification**

12.1. Any modification or variation of the terms and conditions of this Contract, including any modification or variation of the scope of the Services, may only be made by written agreement between the Parties. However, each Party shall give due consideration to any modification(s) or variation(s) made by the other Party.

12.2. In cases of any modification(s) or variation(s), the prior written consent of the Procuring Agency is required.

13. **Force Majeure**

13.1. **Definition**
For the purposes of this Contract, “Force Majeure” means an event which is beyond the reasonable control of a Contractor and which makes a Contractor’s performance of its obligations under the Contract impossible or so impractical as to be considered impossible under the circumstances.

13.2. **No Breach of Contract**
The failure of a Party to fulfill any of its obligations under the contract shall not be considered to be a breach of, or default under, this Contract in so far as such inability arises from an event of Force Majeure, provided that the Party affected by such an event (a) has taken all reasonable precautions, due care and reasonable alternative

measures in order to carry out the terms and conditions of this Contract, and (b) has informed the other Party as soon as possible about the occurrence of such an event.

13.3. **Extension of Time**
Any period within which a Contractor shall, pursuant to this Contract, complete any action or task, shall be extended for a period equal to the time during which such Party was unable to perform such action as a result of Force Majeure.

13.4. **Payments**
During the period of their inability to perform the Services as a result of an event of Force Majeure, the Contractor shall be entitled to continue to be paid under the terms of this Contract, as well as to be reimbursed for additional costs reasonably and necessarily incurred by them during such period for the purposes of the Services and in reactivating the Service after the end of such period.

14. **Termination**

14.1. **By the Procuring Agency**
The Procuring Agency may terminate this Contract in case of the occurrence of any of the events specified in paragraphs (a) through (e) of this Clause. In such an occurrence the Procuring Agency shall give at least thirty (30) calendar days' written notice of termination to the Contractor in case of the events referred to in (a) through (d); at least sixty (60) calendar days' written notice in case of the event referred to in (e);

14.1.1. If the Contractor fails to remedy a failure in the performance of its obligations hereunder, as specified in a notice of suspension;

14.1.2. If the Contractor becomes (or, if the Contractor consists of more than one entity, if any of its members becomes) insolvent or bankrupt or enter into any agreements with their creditors for relief of debt or take advantage of any law for the benefit of debtors or go into liquidation or receivership whether compulsory or voluntary;

14.1.3. If the Contractor fails to comply with any final decision reached as a result of arbitration proceedings;

14.1.4. If, as the result of Force Majeure, the Contractor is unable to perform a material portion of the Services for a period of not less than sixty (60) calendar days;

14.1.5. If the Procuring Agency, in its sole discretion and for any reason whatsoever, decides to terminate this Contract;

14.2. **By the Contractor**
The Contractor may terminate this Contract, by not less than thirty (30) calendar days' written notice to the Procuring Agency, in case of the occurrence of any of the events specified in paragraphs (a) through (d) of this Clause.

14.2.1. If the Procuring Agency fails to pay any money due to the Contractor pursuant to this Contract and not subject to dispute within forty-five (45) calendar days after receiving written notice from the Contractor that such payment is overdue;

14.2.2. If, as the result of Force Majeure, the Contractor is unable to perform a material portion of the Services for a period of not less than sixty (60) calendar days;

14.2.3. If the Procuring Agency fails to comply with any final decision reached as a result of arbitration;

14.2.4. If the Procuring Agency is in material breach of its obligations pursuant to this Contract and has not remedied the same within forty-five (45) days (or such longer period as the Bidder may have subsequently approved in writing) following the receipt by the Procuring Agency of the Contractor's notice specifying such breach.

C. Obligations of the Contractor

15. **General**

15.1. **Standard of Performance**

15.1.1. The Contractor shall perform the Services and carry out the Services with all due diligence, efficiency and economy, in accordance with generally accepted professional standards and practices, and shall observe sound management practices, and employ appropriate technology and safe and effective equipment, machinery, materials and methods. The Contractor shall always act, in respect of any matter relating to this Contract or to the Services, as a faithful adviser to the Procuring Agency, and shall at all times support and safeguard the Procuring Agency's legitimate interests in any dealings with the third parties;

15.1.2. The Contractor shall employ and provide such qualified and experienced Experts and Sub-Contractors as are required to carry out the Services.

15.2. **Law Applicable to Services**
The Contractor shall perform the Services in accordance with the Contract and in accordance with the Law of Pakistan and shall take all practicable steps to ensure that any of its Experts and Sub-Bidders, comply with the Applicable Law.

16. **Conflict of Interests**

16.1. **Contractor Not to Benefit from Commissions and Discounts**
The remuneration of the Contractor shall constitute the Contractor's sole remuneration in connection with this Contract or the Services, and the Contractor shall not accept for their own benefit any trade commission, discount, or similar payment in connection with activities pursuant to this Contract or to the Services or in the discharge of their obligations under the Contract, and the Contractor shall use their best efforts to ensure that the Personnel, any Subcontractors, and agents of either of them similarly shall not receive any such additional remuneration.

16.2. **Contractor and Affiliates Not to be Otherwise Interested in Project**
The Contractor agree that, during the term of this Contract and after its termination, the Contractor and its affiliates, as well as any Subcontractor and any of its affiliates, shall be disqualified from providing Services (other than the Services and any continuation thereof) for any project resulting from or closely related to the Services.

16.3. **Prohibition of Conflicting Activities**
Neither the Bidder nor its Subcontractors nor the Personnel shall engage, either directly or indirectly, in any of the following activities:

16.3.1. during the term of this Contract, any business or professional activities in the Government's country which would conflict with the activities assigned to them under this Contract;

16.3.2. during the term of this Contract, neither the Contractor nor their Subcontractors shall hire public employees in active duty or on any type of leave, to perform any activity under this Contract;

16.3.3. after the termination of this Contract, such other activities as may be specified in the **SCC.**

17. **Insurance to be Taken Out by the Contractor**

17.1. The Contractor(a) shall take out and maintain, and shall cause any Subcontractors to take out and maintain, at its (or the Sub-contractors', as the case may be) own cost but on terms and conditions approved by the Procuring Agency, insurance against the risks, and for the coverage, as shall be specified in the **SCC**; and (b) at the Procuring Agency's request, shall provide evidence to the Procuring Agency showing that such insurance has been taken out and maintained and that the current premiums have been paid.

18. **Contractor's Actions Requiring Procuring Agency's Prior Approval**

18.1. The Contractor shall obtain the Procuring Agency's prior approval in writing before taking any of the following actions:

18.1.1. appointing such members of the Personnel not provided by the Contractor;

18.1.2. changing the Program of activities; and

18.1.3. any other action that may be specified in the **SCC.**

19. **Reporting Obligations**

19.1. The Contractor shall submit to the Procuring Agency the reports and documents in the numbers, and within the periods as prescribed by the Procuring Agency.

20. **Liquidated Damages**

20.1. **Payments of Liquidated Damages**
The Contractor shall pay liquidated damages to the Procuring Agency at the rate per day stated in the **SCC** for each day that the Completion Date is later than the Intended Completion Date. The total amount of liquidated damages shall not exceed the amount defined in the **SCC**. The Procuring Agency may deduct liquidated damages from payments due to the Contractor. Payment of liquidated damages shall not affect the Contractor's liabilities.

20.2. **Correction for Over-payment**
If the Intended Completion Date is extended after liquidated damages have been paid, the Procuring Agency shall correct any overpayment of liquidated damages by the Contractor by adjusting the next payment certificate. The

Contractor shall be paid interest on the overpayment, calculated from the date of payment to the date of repayment, at the rates specified in **SCC.**

20.3. **Lack of performance penalty**
If the Contractor has not corrected a Defect within the time specified in the Procuring Agency's notice, a penalty for Lack of performance will be paid by the Contractor. The amount to be paid will be calculated as a percentage of the cost of having the Defect corrected, assessed as specified in the Contractor

21. **Performance Guarantee**

21.1. Within the time stipulated in the acceptance letter from the Procuring Agency, the successful Bidder shall furnish the Performance Guarantee in shape and amount **specified in SCC.**

21.2. The proceeds of the Performance Guarantee shall be payable to the Procuring agency as compensation for any loss resulting from the Supplier's failure to complete its obligations under the Contract.

21.3. The Performance Guarantee shall be denominated in the currency of the Contract, or in a freely convertible currency acceptable to the Procuring agency and shall be in the acceptable form as specified in **SCC**.

21.4. The Performance Guarantee will be discharged by the Procuring agency and returned to the Supplier not later than thirty (30) days following the date of completion of the Supplier's performance obligations under the Contract, including any warranty obligations, unless otherwise **specified in SCC.**

22. **Sustainable Procurement**

22.1. The Contractor shall conform to the sustainable procurement contractual provisions, if and as specified in the **SCC.**

D. Contractor's Personnel

23. **Description of Personnel**

23.1. The titles, agreed job descriptions, minimum qualifications, and estimated periods of engagement in the carrying out of the Services of the Contractor's Key Personnel. The Key Personnel listed by title as well as by name are hereby approved by the Procuring Agency.

24. **Removal and / or Replacement of Personnel**

24.1. Except as the Procuring Agency may otherwise agree, no changes shall be made in the Key Personnel. If, for any reason beyond the reasonable control of the Contractor, it becomes necessary to replace any of the Key Personnel, the Contractor shall provide as a replacement a person of equivalent or better qualifications.

24.2. If the Procuring Agency finds that any of the Personnel have (i) committed serious misconduct or have been charged with having committed a criminal action, or (ii) have reasonable cause to be dissatisfied with the performance of any of the Personnel, then the Contractor shall, at the Procuring Agency's written request specifying the grounds thereof, provide as a replacement a person with qualifications and experience acceptable to the Procuring Agency.

24.3. The Contractor shall have no claim for additional costs arising out of or incidental to any removal and/or replacement of Personnel.

E. Obligations of the Procuring Agency

25. **Change in the Applicable Law**

25.1. If, after the date of this Contract, there is any change in the Applicable Law with respect to taxes and duties which increases or decreases the cost of the Services rendered by the Contractor, then the remuneration and reimbursable expenses otherwise payable to the Contractor under this Contract shall be increased or decreased accordingly by agreement between the Parties, and corresponding adjustments shall be made to the amounts referred in the **SCC.**

26. **Services and Facilities**

26.1. The Procuring Agency shall make available to the Contractor and the Experts, for the purposes of the Services and free of any charge, the services, facilities and property described in the Terms of Reference, at the times and in the manner specified in the Terms of Reference.

26.2. In case that such services, facilities and property shall not be made available to the Contractor, the Parties shall agree on (i) any time extension that it may be appropriate to grant to the Contractor for the performance of the Services, (ii) the manner in which the Contractor shall procure any such services, facilities and property from other sources, and (iii) the additional payments, if any, to be made to the Contractor as a result thereof.

F. Payments to the Contractor

27. **Contract Price**

27.1. The price payable shall be in Pakistani Rupees unless otherwise specified in the **SCC**.

28. **Terms and Conditions of Payment**

28.1. Payments will be made to the Contractor according to the payment schedule stated in the **SCC** and as per actual invoice submitted by the Contractor.

28.2. Unless otherwise stated in the **SCC**, the advance payment shall be made against the provision by the Contractor of a bank guarantee for the same amount, and shall be valid for the period stated in the **SCC.** Any other payment shall be made after the conditions listed in the **SCC** for such payment have been met, and the Contractor have submitted an invoice to the Procuring Agency specifying the amount due.

29. **Quality Control Identifying Defects**

29.1. The principle and modalities of Inspection of the Services by the Procuring Agency shall be as indicated in the **SCC.** The Procuring Agency shall check the Contractor's performance and notify him of any Defects that are

found. Such checking shall not affect the Contractor's responsibilities. The Procuring Agency may instruct the Contractor to search for a Defect and to uncover and test any service that the Procuring Agency considers may have a Defect. Defect Liability Period is as defined in the **SCC**.

29.2. A {INSPECTION}

30. **Correction of Defects, and Lack of Performance Penalty**

30.1. The Procuring Agency shall give notice to the contractor of any Defects before the end of the Contract. The Defects liability period shall be extended for as long as Defects remain to be corrected.

30.2. Every time notice a Defect is given; the contractor shall correct the notified Defect within the length of time specified by the Procuring Agency's notice.

30.3. If the contractor has not corrected a Defect within the time specified in the Procuring Agency's notice, the Procuring Agency will assess the cost of having the Defect corrected, the contractor will pay this amount, and a Penalty for Lack of Performance.

31. **Settlement of Disputes Amicable Settlement**

31.1. The Parties shall use their best efforts to settle amicably all disputes arising out of or in connection with this Contract or its interpretation.

32. **Dispute Settlement**

32.1. **Arbitration**
If any dispute of any kind whatsoever shall arise between the procuring agency and the contractor in connection with or arising out of the Contract, including without prejudice to the generality of the foregoing, any question regarding its existence, validity or termination, or the execution of the contract, the parties shall seek to resolve any such dispute or difference by mutual consultation. If the parties fail to resolve such a dispute or difference even after negotiations or mediation, then the dispute shall be referred within fourteen (14) days in writing by either party to the Arbitrator, with a copy to the other party.
Any dispute in respect of which a notice of intention to commence arbitration has been given, in accordance with **GCC sub-clause 32.1**, shall be finally settled by arbitration. Arbitration may be commenced prior to or after completion of the Contract. Arbitration proceedings shall be conducted in accordance with Arbitration Act 1940. Notwithstanding any reference to arbitration herein, the parties shall continue to perform their respective obligations under the Contract unless otherwise agreed. The Procuring Agency shall continue to pay the Contractor any undisputed amounts due under the Contract during the resolution of any dispute.

Special Conditions of Contract

SECTION VIII. SPECIAL CONDITIONS OF CONTRACT

The following Special Conditions of Contract shall supplement the General Conditions of Contract. Whenever there is a conflict, the provisions herein shall prevail over those in the Conditions of Contract. The corresponding clause number of the GCC is indicated in parentheses.

Number of GC Clause

Amendments of, and Supplements to, Clauses in the General Conditions of Contract

Number of GC Clause 1

Definitions

The Procuring Agency is: SBP BSC Multan (SBP Banking Services Corporation (BSC)), Assistant Executive Engineer Pul Mouj Darya Road LMQ Road, Multan City, Multan (District), Multan Division (Division), Punjab (Province).

The Supplier is:

The title of the subject procurement is: Structural Strengthening of Annexe Building of SBP BSC Multan

Number of GC Clause 2

Applicable/Governing Law:

The Contract shall be interpreted in accordance with the laws of Islamic Republic of Pakistan

Number of GC Clause 3

Language:

The language of the Contract, all correspondence and communications to be given, and all other documentation to be prepared and supplied under the Contract shall be in **English.**

Number of GC Clause 4

Notices:

The addresses for the notices are:

Procuring Agency:

SBP BSC Multan (SBP Banking Services Corporation (BSC)), Assistant Executive Engineer
Pul Mouj Darya Road LMQ Road, Multan City, Multan (District), Multan Division (Division), Punjab (Province).
+92-321-667-8800
umer.javaid@sbp.org.pk

Contractor/ Bidder:

[Name, address and telephone number]

The Contractor/ Bidder's Representative(s)

[Name, address, telephone number and e-mail address]

Number of GC Clause 6.1

The Authorized Representatives are:

For the Procuring Agency:

SBP BSC Multan (SBP Banking Services Corporation (BSC)), Assistant Executive Engineer
Pul Mouj Darya Road LMQ Road, Multan City, Multan (District), Multan Division (Division), Punjab (Province).
+92-321-667-8800
umer.javaid@sbp.org.pk

For the Bidder:

Name: ……

Designation: ……..

Address: ……..

Number of GC Clause 7

Effectiveness of the contract

The Contractor/Bidder shall be effective within ….. days from the date of signature of the Contract by both parties

Number of GC Clause 8

Commencement of Contract:

The Contractor/Bidder shall provide Non-Consultancy Services from the effective date of contract.

Number of GC Clause 10.2

Expiration of Contract:

The time period shall be ……

Number of GC Clause 14

Termination

In the event of termination of the contract due to any reason as already defined in the General Conditions of Contract, the Bidder shall be responsible for providing to the Authority the Goods till the time of alternate arrangements.

Number of GC Clause 16

Conflict of Interest:

The Procuring Agency reserves the right to determine on a case-by-case basis whether the Bidder should be disqualified from providing goods or services due to a conflict of a nature described in Clause GCC 17.

Number of GC Clause 20

Liquidated Damages

If the Bidder fails to provide services as required under the contract or in case of any data loss/data breach or any incident compromising the data security or other such failures related to any services, the Bidder shall pay to the Procuring Agency as Liquidated Damages at a rate of **0.10%** to **10.00%** of the Contract value, in accordance with the extent of performance failure & the cost of investigating such incidents as judged by the Authority.

Number of GC Clause 21

Performance Guarantee:

The amount of performance guarantee shall be **10.00%** of the contract price in acceptable form of **Pay Order, Banker's Cheque, Bank Guarantee, Demand Draft**

Number of GC Clause 27

Currency of Payment:

All the payment to be released to the contractor/Bidder shall be in Pakistani Rupees.

Number of GC Clause 28

Payment terms:

Payment will be made to the Bidder against the procured Goods and services according to the actual invoice or running bills submitted by the Bidder against the services provided within the time given in the conditions of the contract.

Number of GC Clause 29

Identifying Defects:

The Authority reserves the right at any time to inspect the premises of the provider to inspect the goods and monitor the goods being provided.

Inspections & Tests Requirements

For being Brand New, bearing relevant reference numbers of the equipment (Certificate from supplier)

For Physical Fitness having No Damages (Certificate from supplier)

For the Country of Origin as quoted by the Supplier (Certificate from manufacturer)

For conformance to specifications and performance parameters, through Prior to delivery inspection (Inspection Report by Procurement Committee / Inspection Team)

For successful operation at site after complete installation, testing and commissioning of the equipment (Installation, Testing and Commissioning Report by Procurement Committee / Inspection Team)

Delivery & Documents

Copies of the Supplier's invoice showing Goods' description, quantity, unit price, and total amount;

Original and two copies of the usual transport document (for example, a negotiable bill of lading, a non-negotiable sea waybill, an inland waterway document, an air waybill, a railway consignment note, a road consignment note, or a multimodal transport document) which the buyer may require to take the goods;

Copies of the packing list identifying contents of each package;

Insurance Certificate;

Manufacturer's or Supplier's Valid Warranty Certificate;

Inspection Certificate issued by the Nominated Inspection Agency (if any), and the Supplier's Factory Inspection Report;

Certificate of Origin.

The above documents would be required even if the equipment has already been imported and is available with the supplier ex-stock

Number of GC Clause 31

Following is the guidance for Dispute Resolution

i. If any dispute of any kind whatsoever shall arise between the Authority and the Bidder in connection with or arising out of the Contract... (full clause unchanged)

ii. At future of negotiation the dispute shall be resolved through mediation...

iii. At failure of mediation, arbitration under Arbitration Act 1940...

iv. Cost sharing equally...

v. Proceedings may commence before/after completion...

Notwithstanding any reference to the arbitration herein, the parties shall continue to perform their respective obligations under the Contract.

Rules of procedure for arbitration proceedings:

Any dispute between the Authority and a Bidder shall be referred to arbitration under the laws of Pakistan including Arbitration Act 1940.

Place of Arbitration and Award:

The arbitration shall be conducted in English language and place shall be Islamabad. The award shall be final and binding.

Bid Securing Declaration

Form 9: Bid Securing Declaration

Date: *[insert date (as day, month and year)]*

Bid No.:***P113536***

To: **SBP BSC Multan (SBP Banking Services Corporation (BSC)), Assistant Executive Engineer Pul Mouj Darya Road LMQ Road, Multan City, Multan (District), Multan Division (Division), Punjab (Province).**

We, the undersigned, declare that:

We understand that, according to your conditions, Bids must be supported by a Bid Securing Declaration.

We accept that we will be blacklisted and henceforth cross debarred for participating in respective category of public procurement proceedings for a period of (not more than) six months, if fail to abide with a bid securing declaration, however without indulging in corrupt and fraudulent practices, if we are in breach of our obligation(s) under the Bid conditions, because we:

1. have withdrawn or modified our Bid during the period of Bid Validity specified in the Form of Bid;

2. Disagreement to arithmetical correction made to the Bid price; or

3. having been notified of the acceptance of our Bid by the Procuring Agency during the period of Bid Validity, (i) failure to sign the contract if required by Procuring Agency to do so or (ii) fail or refuse to furnish the Performance Security or to comply with any other condition precedent to signing the contract specified in the Bidding Documents.

We understand this Bid Securing Declaration shall expire if we are not the successful

Bidder, upon the earlier of (i) our receipt of your notification to us of the name of the successful Bidder; or (ii) twenty-eight (28) days after the expiration of our Bid.

Contract Form

SECTION IX: CONTRACT FORMS

THIS AGREEMENT made the _____ day of _____ 20_____ between **SBP BSC Multan (SBP Banking Services Corporation (BSC)), Assistant Executive Engineer Pul Mouj Darya Road LMQ Road, Multan City, Multan (District), Multan Division (Division), Punjab (Province).**

(hereinafter called "the Procuring Agency") of the one part and *[name of Bidder]* of *[city and country of Bidder]* (hereinafter called "the Bidder") of the other part:

WHEREAS the Procuring Agency invited Bids for provision of goods, viz., **Structural Strengthening of Annexe Building of SBP BSC Multan (*P113536*)** and has accepted a Bids by the Bidder for the provision of Goods in the sum of *[contract price in words and figures]* (hereinafter called "the Contract Price").

NOW THIS CONTRACT WITNESSETH AS FOLLOWS:

1. In this Contract words and expressions shall have the same meanings as are respectively assigned to them in the Conditions of Contract referred to.

2. The following documents shall be deemed to form and be read and construed as part of this Contract, In the event of any ambiguity or conflict between the Contract Documents listed below, the order of precedence shall be the order in which the Contract Documents are listed below:-

1. This form of Contract;
2. the Form of Bids and the Price Schedule submitted by the Bidder;
3. the Schedule of Requirements;
4. the Technical Specifications;
5. the Special Conditions of Contract;
6. the General Conditions of the Contract;
7. the Procuring Agency's Letter of Acceptance; and
8. [*add here: any other documents*]

3. In consideration of the payments to be made by the Procuring Agency to the Bidder as hereinafter mentioned, the Bidder hereby covenants with the Procuring Agency to provide the Goods related services and to remedy defects therein in conformity in all respects with the provisions of the Contract.

4. The Procuring Agency hereby covenants to pay the Bidder in consideration of the provision of Goods and the remedying of defects therein, the Contract Price or such other sum as may become payable under the provisions of the contract at the times and in the manner prescribed by the contract.

IN WITNESS whereof the parties hereto have caused this Contract to be executed in accordance with their respective laws the day and year first above written.

Signed, sealed, delivered by _____the _____ (for the Procuring Agency)

Witness to the signatures of the Procuring Agency:

……

Signed, sealed, delivered by _____the _____ (for the Procuring Agency)

Witness to the signatures of the Bidder: ……

PUBLIC PROCUREMENT REGULATORY AUTHORITY (PPRA) EPADS

Integrity Pact

Integrity Pact

DECLARATION OF FEES, COMMISSION AND BROKERAGE ETC. PAYABLE BYTHE SUPPLIERS OF GOODS, SERVICES & WORKS IN CONTRACTS WORTH RS.10.00 MILLION OR MORE

Contract Number: Contract Value: Contract Title:

Dated:

[Name of Supplier] hereby declares that it has not obtained or induced the procurement of any contract, right, interest, privilege or other obligation or benefit from Government of Pakistan or any administrative subdivision or agency thereof or any other entity owned or controlled by it (GoP) through any corrupt business practice.

Without limiting the generality of the foregoing [Name of Supplier] represents and warrants that it has fully declared the brokerage, commission, fee etc. paid or payable to anyone and not given or agreed to give and shall not give or agree to give to anyone within or outside Pakistan either directly or indirectly through any natural or juridical person, including its affiliate, agent, associate, broker, consultant, director, promoter, shareholder, sponsor or subsidiary, any commission, gratification, bribe, finder's fee or kickback, whether described as consultations fee or otherwise, with the object of obtaining or inducing the procurement of a contract, right, interest, privilege or other obligation or benefit in whatsoever form from GoP, except that which has been expressly declared pursuant hereto.

[Name of Supplier] certifies that it has made and will make full disclosure of all agreements and arrangements with all persons in respect of or related to the transaction with GoP and has not taken any action or will not take any action to circumvent the above declaration, representative or warranty.

[Name of Supplier] accepts full responsibility and strict liability for making and false declaration, not making full disclosure, misrepresenting fact or taking any action likely to defeat the purpose of this declaration, representation and warranty. It agrees that any contract, right interest, privilege or other obligation or benefit obtained or procured as aforesaid shall, without prejudice to any other right and remedies available to GoP under any law, contract or other instrument, be voidable at the option of GoP.

Notwithstanding any rights and remedies exercised by GoP in this regard, [Name of Supplier] agrees to indemnify GoP for any loss or damage incurred by it on account of its corrupt business practices and further pay compensation to GoP in an amount equivalent to ten time the sum of any commission, gratification, bribe, finder's fee or kickback given by [Name of Supplier] as aforesaid for the purpose of obtaining or inducing the procurement of any contract, right, interest, privilege or other obligation or benefit in whatsoever form from GoP.

Performance Guarantee Form

Performance Guarantee Form

To: **SBP BSC Multan (SBP Banking Services Corporation (BSC)), Assistant Executive Engineer Pul Mouj Darya Road LMQ Road, Multan City, Multan (District), Multan Division (Division), Punjab (Province).**

WHEREAS *[name of Bidder]* (hereinafter called "the Bidder") has undertaken, in pursuance of Contract No. *[reference number of the contract]* dated *[insert date]* for provision of Goods*(*hereinafter called "the Contract").

AND WHEREAS it has been stipulated by you in the said Contract that the Bidder shall furnish you with a Bank Guarantee by a reputable bank for the sum specified therein as security for compliance with the Bidder's performance obligations in accordance with the Contract.

AND WHEREAS we have agreed to give the Bidders guarantee:

THEREFORE, WE hereby affirm that we are Guarantors and responsible to you, on behalf of the Bidder, up to a total of *[amount of the guarantee in words and figures]*, and we undertake to pay you, upon your first written demand declaring the Bidder to be in default under the Contract and without cavil or argument, any sum or sums within the limits of *[amount of guarantee]* as aforesaid, without your needing to prove or to show grounds or reasons for your demand or the sum specified therein.

This guarantee is valid until the: *[insert date]*

Signature and seal of the Guarantors

_____

[name of bank or financial institution]

[address]

[date}

PUBLIC PROCUREMENT REGULATORY AUTHORITY (PPRA) EPADS

Annexure

PUBLIC PROCUREMENT REGULATORY AUTHORITY (PPRA) EPADS

Annexure-01 - Bidding Data Sheet (BDS) – Part-B

Information (Read-Only)

See Form Under Additional Forms and Documents: **Annexure-01 - Bidding Data Sheet (BDS) – Part-B** (page number: 120)

Annexure-02 - Section VIII - SCC (Part-B)

Information (Read-Only)

See Form Under Additional Forms and Documents: **Annexure-02 - Section VIII - SCC (Part-B)** (page number: 121)

Annexure-03 - Formula for Price Adjustment

Information (Read-Only)

See Form Under Additional Forms and Documents: **Annexure-03 - Formula for Price Adjustment** (page number: 133)

Annexure-04 - Scope of Works & KPI

Information (Read-Only)

See Form Under Additional Forms and Documents: **Annexure-04 - Scope of Works & KPI** (page number: 134)

Annexure-05 - Technical Specifications & Drawings

Information (Read-Only)

See Form Under Additional Forms and Documents: **Annexure-05 - Technical Specifications & Drawings** (page number: 136)

Annexure-06 - Undertaking

Technical Submission (Vendor)

Document Required

See Form Under Additional Forms and Documents: **Annexure-06 - Undertaking** (page number: 155)

Annexure-07 - Supplier Account details

Information (Read-Only)

See Form Under Additional Forms and Documents: **Annexure-07 - Supplier Account details** (page number: 156)

PUBLIC PROCUREMENT REGULATORY AUTHORITY (PPRA) EPADS

Procurement Forms

Past Experience and Completed Contracts

See Form Under Additional Forms and Documents: **Past Experience and Completed Contracts** (page number: 157)

PUBLIC PROCUREMENT REGULATORY AUTHORITY (PPRA) EPADS

PUBLIC PROCUREMENT REGULATORY AUTHORITY
(PPRA)
EPADS

Additional Forms and Documents

Bidding Data Sheet (BDS) – Part-B

The following specific data shall complement, supplement, or amend the provisions in the Instructions to Bidders (ITB) and Bidding Data Sheet. Whenever there is a conflict, the provisions herein shall prevail over those in ITB and Bidding Data Sheet.

ITB No.	Amendments of, and Supplements
Preparing of Bids	
<u>Goods/Works Terminology</u> For this procurement, references to 'Goods', 'Supplier' and 'Bidder' in the prescribed/system-generated bidding documents shall, where applicable and in the context of the subject procurement, be read as references to the subject Works and Contractor	
11.5 & 13.5	The bid price shall be adjusted in accordance with Annexure-03 – Formula for Price Adjustment and Clause 28.10 of SCC Part B - Price Adjustment.
13.3.2	Alternative Bids to the requirements of the bidding documents will not be permitted.
28.	**Determination of Unit Rates** The total quoted Bid Price shall be apportioned among the individual BOQ items in proportion to their respective employer's / engineer's estimated unit rates, and the corresponding individual unit rates shall be determined accordingly, without altering the total quoted Bid Price. The Bidder shall be deemed to have accepted such determination and adjustment of the individual unit rates. In the event that the Bidder fails or refuses to accept the aforesaid determination or adjustment, the Bid shall be treated as non-responsive, and the Bid Security shall be forfeited.
41.1	**Performance Security (or Guarantee)** Performance Security shall be valid till successful completion of Defect Liability Period
42.2	**Advance Payment** The Procuring agency/Employer will provide an advance payment as stipulated in the Conditions of Contract.

Section VIII – Special Conditions of Contract (SCC) – Part-B

The following Special Conditions of Contract (SCC) shall supplement the GCC. Whenever there is a conflict, the provisions herein shall prevail over those in the GCC and SCC.

GCC Clause No.	Amendments of, and Supplements to, Clauses in the GCC
Goods/Works Terminology For this procurement, references to 'Goods', 'Supplier' and 'Bidder' in the prescribed/system-generated bidding documents shall, where applicable and in the context of the subject procurement, be read as references to the subject Works and Contractor.	
6.1	**Authorized Representatives / Authority of Member in charge** The Authorized representative will be mentioned in Notice to Commence / Work Order
8.1	**Commencement of Services** The Commencement date will be mentioned in Notice to Commence / Work Order
9.1	**Program schedule** Contract Duration is: **540 days,** from start of commencement of Contract.
12	**VARIATIONS AND CLAIMS** **12.1 Right to Vary** The Employer/Engineer may issue Variation Order(s) in writing. Where for any reason it has not been possible for the Employer/Engineer to issue such Variations Order(s), the Contractor may confirm any verbal orders given by the Employer/Engineer in writing and if the same are not refuted/denied by the Employer/Engineer within seven (7) days of the receipt of such confirmation the same shall be deemed to be a Variation Orders for the purposes of this Sub-Clause. **12.2 Valuation of Variations** Variations shall be valued as follows: a) at a lump sum price agreed between the Parties, or b) where appropriate, at rates in the Contract, or c) rates notified by the Government Departments/agencies, or d) in the absence of appropriate rates, the rates in the Contract shall be used as the basis for valuation, or failing which e) at appropriate new rates, as may be agreed or which the Engineer/Employer considers appropriate Contractor's profit & overheads shall be up to 15% of the cost of labour & materials, cartage, etc. Taxes shall be considered as per actual rate while analyzing rates for any extra items. For the valuation of variations and determination of rates for non-BOQ/extra items, the approval of the Head/Director Engineering shall be obtained. The decision of the Head/Director Engineering in this regard shall be final and binding upon both parties. The approval / finalization of rates of all variations shall not relieve the Contractor of his obligations under the Contract. The Contractor shall neither stop the work nor slow down the progress of the Works in awaiting the approval of rates of all variations. **12.3 Early Warning**

Section VIII – Special Conditions of Contract (SCC) – Part-B

GCC Clause No.	Amendments of, and Supplements to, Clauses in the GCC
	The Contractor shall notify the Engineer/Employer in writing as soon as he is aware of any circumstance which may delay or disrupt the Works, or which may give rise for Extension in time. To the extent of the Contractor's failure to notify, which results to the Engineer/Employer being unable to keep all relevant records or not taking steps to minimize any delay, disruption, the Contractor's entitlement to extension of the Time for Completion may be reduced/rejected. **12.4 Variation Procedure** The Contractor shall submit to the Engineer/Employer an itemized make-up of the value of variations within twenty-eight (28) days of the instruction. The Engineer/Employer shall check and if possible agree the value. In the absence of agreement, the Employer shall determine the value.
13.3	**Extension of Time** The Contractor shall, within such time as may be reasonable under the circumstances, notify the Employer of any event(s) falling within the scope of Employer's Risks, or Early Warnings, or adverse ground conditions, force majeure not leading to Contract termination, or any instruction of the Employer to slow down the progress of works or change in the scope of Works by the Employer requiring additional time for completion of the Works as per the revised scope of Works, may request the Employer to extend the Completion Time reasonably. The Contractor must have to provide complete record of the circumstances on account of which extension of time is being applied along with an up-dated program/schedule in bar chart form for completion of the balance works. The Employer may evaluate the request lodged by the Contractor and extend the Completion Time. The decision of the Director/Head Engineering will be final & binding upon the Contractor. It is being understood and agreed by the Contractor that the sole remedy for delay shall be extension in the time for performance of the Contractor's work, which extension shall not be subject to any valuation.
13.4	**Force Majeure & Payment upon Termination** In the event the procurement cannot be materialized for any reason, or if the procurement is suspended or discontinued at any stage, the Supplier/Contractor shall only be entitled to payment for the goods delivered. No other payments claim in this regard shall be admissible. The decision of the Director/Head of Engineering shall be final and binding in this regard
14	**Termination** 14.1 Notwithstanding anything contained in GCC Clause 14 or the system-generated SCC, for purposes of this Contract, references therein to "Services", "Goods" or similar terminology shall, where applicable, be construed as references to the Works covered by this Contract. 14.2 Termination for Contractor's Default: Without prejudice to any other remedy available under the Contract or applicable law, the Employer may terminate the Contract in accordance with GCC Clause 14 where the Contractor commits a material or

Section VIII – Special Conditions of Contract (SCC) – Part-B

GCC Clause No.	Amendments of, and Supplements to, Clauses in the GCC
	fundamental breach of its contractual obligations and fails to remedy such breach within the period specified in a written notice issued by the Employer. 14.3 In the event of termination for Contractor default, the Employer shall be entitled, subject to the Contract and applicable law, to arrange for completion of the remaining Works through any lawful alternative means, and the additional cost reasonably incurred in completing the Works may be recovered from the Contractor, subject to determination in accordance with the Contract. 14.4 Termination for Convenience: The Employer may terminate the Contract for its convenience by giving the Contractor [30] calendar days' written notice. 14.5 Upon termination, the Contractor shall immediately take all reasonable steps to protect the Works executed and shall, as directed by the Employer, hand over completed Works, materials, equipment, drawings, records and other documents relating to the Contract. 14.6 Termination shall not affect any rights, remedies or liabilities of either Party which have accrued prior to the effective date of termination. 14.7 The Contractor shall be entitled to payment for Works properly executed and accepted up to the effective date of termination, subject to the terms of the Contract and adjustment of any amounts lawfully recoverable from the Contractor.
17	**Insurance to be taken out by the Contractor** From AA rated Insurance Company of PACRA/ JCR. **The Works** Amount of Cover: The sum stated in Letter of Acceptance plus fifteen percent 15%. **Contractor 's equipment** Amount of Cover: Full replacement Cost Injury to Person and Damaged to Property including Third Party Insurance **Amount of Cover:** I) As per workmen compensation act II) Contractor's all Risk including Third party III) damages to the Structure, stores if supplied by the Bank
20.1	**Liquidated Damages** 20.1 Notwithstanding anything contained in GCC Clause 20 or the system-generated SCC, if the Contractor fails to complete the Works within the Completion Period specified in the Contract, including any extension of time duly granted under the Contract, the Contractor shall be liable to pay Liquidated Damages for each day of delay attributable to the Contractor. 20.2 Liquidated Damages shall be calculated at the rate of [0.10%] of the Contract Price per day of delay, subject to a maximum aggregate amount of [10%] of the Contract Price.

Section VIII – Special Conditions of Contract (SCC) – Part-B

GCC Clause No.	Amendments of, and Supplements to, Clauses in the GCC
	20.3 No Liquidated Damages shall be imposed for any period of delay for which the Contractor is entitled to an Extension of Time under the Contract. 20.4 The Employer may recover/deduct the Liquidated Damages from any amount due or becoming due to the Contractor under the Contract. 20.5 The imposition or recovery of Liquidated Damages shall not relieve the Contractor of its obligation to complete the Works or of any other contractual liability arising from the delay. 20.6 The provisions of this Clause shall be subject to the applicable provisions of the Contract Act, 1872.
20.2	**Correction for Over-Payment** If the Intended Completion Date is extended after Liquidated Damages have been paid, the Procuring Agency shall correct any overpayment of Liquidated Damages by the Contractor by adjusting the next Payment Certificate. No interest shall be payable to the Contractor on the amount of such overpayment.
28	**Terms and Conditions of Payment** Add the following 28.1 The Contractor shall submit to the Employer/Engineer, from time to time, a Statement, Bill or Invoice setting out in detail all amounts to which the Contractor considers himself entitled under the Contract, together with all supporting documents and records (if required) to substantiate such amounts, in such form and manner as may be prescribed by the Employer/Engineer from time to time. 28.2 The Employer/Engineer shall have the right, by any Bill or Interim Payment Certificate, to make any correction, adjustment or modification to any amount previously certified in any Interim Payment Certificate. Furthermore, if any part of the Works is not being executed to the satisfaction of the Employer/Engineer or is not in accordance with the Contract, the Employer/Engineer shall have the authority to omit, withhold or reduce the value of such work in any Interim Payment Certificate until the Contractor has satisfactorily rectified the relevant deficiencies. 28.3 The Contractor shall pay all taxes, duties and fees required to be paid by him under the Contract, and the Contract Price shall not be adjusted for any of this cost except where otherwise expressly provided for in the Contract. 28.4 The quantities given in the Bill of Quantities are estimated and provisional and are given to provide a common basis for bidding. The basis of payment will be the actual quantities of work executed and measured by the Contractor and verified by the Engineer and valued at the rates and prices entered in the priced Bill of Quantities, where applicable, and otherwise at such rates and prices as the Engineer may fix as per the Contract. 28.5 Upon issuance of Final Completion Certificate, the payments pertaining to the Works completed during Defects Liability Period and / or money as Retention Money shall be released as per sub-Clause-28.3 and the accounts for the contract shall be closed. The Employer shall release payments within sixty (60) days.

Section VIII – Special Conditions of Contract (SCC) – Part-B

GCC Clause No.	Amendments of, and Supplements to, Clauses in the GCC
	28.6 Retention Money 10% of the net payable amount from each bill (except Mobilization Advance) of the Contractor will be deducted as retention money. The retention money would be released as follows: a. 5% on Completion of the whole work, b. Balance 5% after successful completion of the Defects Liability Period / Warranty Period. **28.7 Advance Payment:** If requested by the Contractor, an interest-free Advance up to 15 % of the Contract Price stated in the Letter of Acceptance shall be paid by the Employer to the Contractor in two equal parts upon submission by the Contractor of an Advance Bank Guarantee for the full amount of the Advance in the specified form from a Scheduled Bank in Pakistan subject to approval of Director/Head Engineering Payments shall be made as per the following criteria; First part of the Mobilization Advance within twenty (20) days after verification of the approved/ legible Bank Guarantee from the issuing bank. Second part of the mobilization advance on arrival of required tools & plants and commencement of Works at site to the entire satisfaction of the Employer. **28.8 Recovery of Advance:** Advance paid to the Contractor shall be recovered from the interim bills of the Contractor @ 15% of total amount of work done at site for the bill being processed till the time that whole of the amount of Mobilization Advance has been recovered **28.9 Secured Advance** The Employer at his sole discretion may provide to Contractor Secured Advance against an indemnity bond acceptable to the Employer of such sum as the Engineer in charge may consider proper in respect of non-perishable materials brought at the Site but not yet incorporated in the permanent Works subject to approval of Director/Head of Engineering, provided that: (a) The materials are in accordance with the Specifications for the permanent works; (b) Such materials have been delivered to the Site and are properly stored and protected against loss or damage or deterioration to the satisfaction of the Engineer in charge but at the risk to cost of the Contractor; (c) The Contractor's records of the requirements, orders, receipts and use of materials are kept in a form approved by the Engineer in charge, and such records shall be available for inspection by the Engineer in charge; (d) The Contractor shall submit with his monthly statement the estimated value of the materials on Site together with such documents as may be required by the Engineer in charge for the purpose of valuation of materials and providing evidence of ownership and payment therefore;

Section VIII – Special Conditions of Contract (SCC) – Part-B

GCC Clause No.	Amendments of, and Supplements to, Clauses in the GCC
	(e) Ownership of such materials shall be deemed to vest in the Employer and these materials shall not be removed from the Site or otherwise disposed of without written permission of the Employer. (f) 60% of the purchase price of the item/material or 50% of tender price of the item/material whichever is lesser, after measuring the quantity & verification of the quality of materials at site by the Employer may be paid The amount of Secured Advance against any item(s)/materials shall be recovered from the next three (03) bill of the Contractor in the form of three equal installments. The Employer reserves the right to recover all outstanding amount of the Secured Advance from very 1st bill of the Contractor submitted after release of the Secured Advance. **28.10 Price Adjustment** The amounts payable to the Contractor shall be adjusted in respect of the rise or fall in the cost of labor and diesel inputs to the Works, by applying to such amount the formula prescribed in this Sub-Clause. (a) Other Changes in Cost To the extent that full compensation for any rise or fall in costs to the Contractor is not covered by the provisions of this or other Clauses in the Contract, the unit rates and prices included in the Contract shall be deemed to include amounts to cover the contingency of such other rise or fall of costs. (b) Adjustment Formula The adjustment to the monthly statements in respect of changes in cost shall be determined from the following formula:- $$Pn = A + b\frac{Ln}{Lo} + c\frac{Dn}{Do}$$ Pn is a price adjustment factor to be applied to the amount for the payment of the work carried out in the subject month where any variations and daywork are not otherwise subject to adjustment; A is a constant, specified in the Annexure-03 to Bid, representing the nonadjustable portion in contractual payments; b, and c are weightages or coefficients representing the estimated proportion of each cost element (Labour and High Speed Diesel) in the Works or Sections thereof, net of Provisional Sums and Prime Cost; the sum of A, b, c shall be one; Ln and Dn are the current cost indices or reference prices of the cost elements for month "n", applicable to each cost element; and: (c) Sources of Indices and Weightages The sources of indices shall be those listed in the Annexure-03 to Bid.

Section VIII – Special Conditions of Contract (SCC) – Part-B

GCC Clause No.	Amendments of, and Supplements to, Clauses in the GCC
	(d) Base, Current, and Provisional Indices The base date price (or base date index) of any element shall be the price of the element for the month on the day falling 28 days prior to the last day for submission of bids. The current date prices (or current date index) of any element shall be the price of the element for the month falling on the day 28 days prior to the last day of the period to which the particular Payment Certificate relates. If at any time the current indices are not available, provisional indices as determined by the Engineer will be used, subject to subsequent correction of the amounts paid to the Contractor when the current indices become available. (e) Adjustment after Completion If the Contractor fails to complete the Works within the Time for Completion prescribed under Clause 9.1, adjustment of prices thereafter until the date of completion of the Works shall be made using either the indices or prices relating to the prescribed time for completion, or the current indices or prices, whichever is more favorable to the Employer, provided that if an extension of time is granted, the above provision shall apply only to adjustments made after the expiry of such extension of time. (f) Weightages The weightages for each of the factors of cost given in the Annexure-03 to Bid shall be adjusted if, in the opinion of the Engineer, they have been rendered unreasonable, unbalanced, or inapplicable as a result of varied or additional work executed or instructed under Clause 12. Such adjustment(s) shall have to be agreed in the variation order.
29.1	**Defect Liability Period** Defects Liability Period (DLP) shall be 365 days
30.1	**Correction of Defects, and Lack of Performance Penalty** **Remedying Defects** The Contractor shall from the date of issue of the Taking Over Certificate carry out, at no cost to the Employer, repair and rectification work which is necessitated by the earlier execution of poor quality of work or use of below specifications material in the execution of Works and which is so identified by the Employer/Engineer in writing within the said period. Upon expiry of the said period, and subject to the Contractor's faithfully performing his aforesaid obligations, the Employer/Engineer shall issue a Defect Liability Certificate Failure to remedy any such defects or complete outstanding work within a reasonable time shall entitle the Employer to carry out all necessary works at the Contractor's cost. **Uncovering and Testing** The Contractor shall give not less than five days' notice in writing to the Engineer-in-charge of work before covering up or otherwise placing beyond the reach of measurement any work in order that same may be measured, and correct dimensions thereof be taken before same is covered or placed beyond the reach of measurement.

Section VIII – Special Conditions of Contract (SCC) – Part-B

GCC Clause No.	Amendments of, and Supplements to, Clauses in the GCC
	The Engineer-in-Charge shall check the Contractor's Work and notify the Contractor of any Defects if found. Such checking shall not affect the Contractor's responsibilities. The Employer may instruct the Contractor to search for a defect and to uncover/ or testing any work that the he considers may have a Defect **Failure to remedying Defects** Failure to remedy any defect(s) or complete the outstanding Works except the defects not attributable to the Contractor, to the entire satisfaction of the Employer within a notified time shall entitle the Employer to extend the defect liability period and / or carry out all necessary works at the Contractor's risk to cost.
31.1	**Settlement of Disputes Amicable Settlement** For Notices Procuring agency/Employer/ Engineer's Authorized representatives name and address: Director / Head Engineering, State Bank of Pakistan
32.1	**Dispute Settlement** 32.1.1 Any dispute arising out of or in connection with the Contract which is not resolved amicably through mutual consultation and/or negotiation shall be referred to arbitration in accordance with the Arbitration Act, 1940, as amended from time to time. 32.1.2 The place/seat of arbitration shall be Karachi, Pakistan and the arbitration proceedings shall be conducted in the English language. 32.1.3 The Arbitrator shall, in the first instance, be appointed by mutual consent of the Employer and the Contractor. 32.1.4 In the event that the Parties fail to agree upon the appointment of an Arbitrator within fourteen (14) days from the date of written request by either Party for such appointment, the appointment shall be made in accordance with the applicable provisions of the Arbitration Act, 1940. 32.1.5 The arbitral award shall be final and binding upon the Parties to the extent provided under applicable law. 32.1.6 Unless otherwise directed by the Arbitrator or agreed between the Parties, the Contractor shall continue to perform its undisputed contractual obligations during the pendency of the dispute and the Employer shall continue to make payment of undisputed amounts properly due under the Contract.
33	Add the following clauses **Attendance of Meetings** The Contractor shall attend all meetings along with his authorized representative(s) when called by the Employer to discuss the quality and progress of Works, site matters and other matters related to the Contract, without any compensation from the Employer
34	**Progress Report** Monthly progress report in the format acceptable to the Engineer shall be prepared by the contractor and submitted to the Engineer in soft/hard format
35	**Lighting Work at Night**

Section VIII – Special Conditions of Contract (SCC) – Part-B

GCC Clause No.	Amendments of, and Supplements to, Clauses in the GCC
	In the event of work being carried out at night, the Contractor shall, at his own cost, provide and maintain such good and sufficient light as will enable the work to proceed satisfactorily and without danger. The approaches to the Site and the Works where the night-work is being carried out shall be sufficiently lighted. All arrangements adopted for such lighting shall be to the satisfaction of the Engineer's Representative.
36	**Right of way and Facilities/utilities** The Contractor shall bear all costs and charges for special and or temporary right of way which may be required for the purposes of the work including those for access to the site The Contractor shall also obtain/arrange at the contractor's risk and cost such facilities /utilities which may be required for the purpose of the work including but not limited to material storage areas, labor accommodation, site offices, temporary access roads, water, electricity etc. All costs, charges, rents, licenses, permissions, utilities and other expenses associated with such facilities shall be borne/obtained by the Contractor.
37	**Health, Safety, Environment and Security (HSE&S)** 37.1 General Compliance The Contractor shall, at its own cost and responsibility, comply with all applicable laws, regulations, codes, standards and statutory requirements relating to Health, Safety, Environment and Security (HSE&S), together with the Employer's applicable HSE&S policies, procedures, rules and instructions communicated to the Contractor from time to time. The Contractor shall take all necessary measures to protect the health, safety and security of its personnel and all other persons affected by the Works and to prevent damage to property and adverse environmental impacts arising from the performance of the Works. All costs associated with compliance with the requirements of this Clause shall be deemed included in the Contract Price, and no separate or additional payment shall be made to the Contractor on this account. 37.2 **HSE&S Management, Inspection and Compliance** The Employer/Engineer may, at any time, conduct inspections, audits and assessments of the Contractor's compliance with HSE&S requirements. The Contractor shall provide all necessary access, information, records and cooperation and shall promptly rectify any deficiency or non-compliance identified by the Employer/Engineer. The Contractor shall immediately comply with any reasonable instruction issued by the Employer/Engineer for the prevention or rectification of any unsafe condition, security risk or environmental hazard. The Employer/Engineer may direct the Contractor to suspend any activity that is being performed in an unsafe manner or in violation of applicable HSE&S requirements. The Contractor shall not be entitled to any extension of time,

Section VIII – Special Conditions of Contract (SCC) – Part-B

GCC Clause No.	Amendments of, and Supplements to, Clauses in the GCC
	additional payment or compensation arising from any suspension caused by its failure to comply with its HSE&S obligations. 37.3 **Personnel Competence and Training** The Contractor shall ensure that all personnel engaged in the Works are adequately trained, competent and qualified to perform their assigned duties safely. The Contractor shall ensure that its personnel understand the risks and hazards associated with their work and shall maintain appropriate records of HSE&S training, inductions and certifications. Such records shall be provided to the Employer/Engineer upon request. 37.4 **Safety, Security and Incident Reporting** The Contractor shall perform the Works in a manner that does not compromise the safety, health, security or environmental standards applicable to the Site. The Contractor shall promptly notify the Employer/Engineer of: a. any accident, injury or dangerous occurrence; b. any actual or potential security threat relating to the Site or the Works; c. any environmental incident, pollution or release of hazardous substances; and d. any other condition that may materially affect the health, safety, security or environment of the Site. The Contractor shall provide all relevant information regarding its working practices, materials, plant and equipment as may reasonably be required by the Employer/Engineer. 37.5 **Environmental Protection** The Contractor shall take all reasonable and necessary measures to prevent pollution and minimize adverse environmental impacts arising from the Works, including, where applicable: a. control of air emissions, dust and other pollutants; b. control of noise and vibration; c. recovery, reuse and recycling of usable materials; d. proper handling, storage, transportation and disposal of hazardous materials and chemicals; e. preservation of natural land, vegetation and other environmental resources to the extent practicable; and f. protection of archaeological, historical or culturally significant sites encountered during the execution of the Works. 37.6 **Personal Protective Equipment (PPE)**

Section VIII – Special Conditions of Contract (SCC) – Part-B

GCC Clause No.	Amendments of, and Supplements to, Clauses in the GCC
	The Contractor shall, at its own cost and responsibility, provide, maintain and ensure the mandatory use of appropriate Personal Protective Equipment (PPE) by all persons engaged in or affected by the Works under its control, including its employees, subcontractors and labourers. The Contractor shall ensure that PPE appropriate to the nature of the work and associated hazards is used at all times. Such PPE shall include, where applicable: a. safety helmets; b. safety shoes or boots; c. high-visibility jackets or vests; d. safety gloves; e. safety goggles or face shields; f. hearing protection; g. respiratory protection; and h. safety harnesses and fall-arrest systems for work at height. All PPE shall comply with applicable standards and shall be properly maintained, regularly inspected and promptly replaced when damaged, defective or unsuitable for use. No person shall be permitted to undertake any activity without the PPE required for that activity. 37.7 **First Aid** The Contractor shall, at its own cost, provide and maintain an adequately stocked first-aid box at the Site and ensure that appropriate arrangements are available for providing prompt first aid and medical assistance in the event of injury or emergency. The first-aid box shall be readily accessible, and the Contractor shall ensure that at least one suitably trained person is available to provide first aid during the execution of the Works. 37.8 **Non-Compliance and Remedies** Any failure by the Contractor to comply with the requirements of this Clause shall constitute a breach of its contractual obligations. Without prejudice to any other rights or remedies available under the Contract or applicable law, the Employer/Engineer may: a. require the Contractor to immediately rectify any non-compliance; b. stop or suspend any unsafe activity until the required corrective measures have been satisfactorily implemented; c. arrange for the required safety measures or Personal Protective Equipment (PPE) to be provided where the Contractor fails to do so, and

Section VIII – Special Conditions of Contract (SCC) – Part-B

GCC Clause No.	Amendments of, and Supplements to, Clauses in the GCC
	recover the full cost thereof from the Contractor by deduction from any amounts due or becoming due to the Contractor; d. where any person under the Contractor's control is found undertaking work without the required PPE, impose a penalty of Rs. 5,000/- (Rupees Five Thousand only) per person per occurrence; e. in case of repeated or serious PPE violations, including failure to use mandatory fall-protection equipment while working at height, impose a penalty of Rs. 10,000/- (Rupees Ten Thousand only) per person per occurrence, in addition to stopping or suspending the relevant activity until the required corrective measures have been implemented; and/or f. in the event of serious, material or repeated non-compliance with HSE&S requirements, take such further action, including suspension or termination of the Contract. Any delay, loss, damage, cost or consequence arising from the Contractor's failure to comply with its HSE&S obligations shall be borne solely by the Contractor. All penalties and recoverable costs under this Clause may be deducted from the Contractor's bills or from any other amounts due or becoming due to the Contractor.
38	**Site Clearance** Upon completion of the Works, or at such earlier stage as may be directed by the Employer, the Contractor shall remove from the Site all temporary structures, camps, dumpsites, debris, surplus materials, waste and other obstructions arising from the execution of the Works, and shall fill and properly reinstate all trenches, excavations and other areas disturbed by the Contractor. The Contractor shall obtain a Site Clearance Certificate from the Employer and submit the same with each Running Bill or the Final Payment Application, as the case may be. In the event that the Contractor fails or refuses to carry out the required site clearance within the period specified by the Employer, the Employer may, without prejudice to any other rights or remedies available under the Contract, undertake or arrange for such work to be carried out through other sources or contractors. The Employer shall be entitled to recover all costs and expenses so incurred from any amount due or becoming due to the Contractor, including retention money and/or any other sums payable under the Contract. If such amounts are insufficient, the Employer may recover the balance from the Performance Security, subject to the terms and conditions of the Contract. In this regard, the decision of the Director/Head of Engineering shall be final and conclusive, subject to the dispute resolution provisions of the Contract

Formula for Price Adjustment

The source of indices and the weightages or coefficients for use in the adjustment formula under Clause **28.10** shall be as follows:

Cost Element	Description	Weightages	Applicable index
(i)	(ii)	(iii)	(iv)
A	Fixed Portion	0.82	
b	Labour *[Labourer (un-skilled) per day shall be taken as representative of all the items of labour (skilled/un-skilled) deployed at site]*	0.13	Government of Pakistan (GP) Federal Bureau of Statistics (FBS) Monthly Statistical Bulletin.
c	High Speed Diesel (HSD) *[HSD shall be taken as representative of all kind of fuels used in connection with the Contract]*	0.05	As announced by Pakistan State Oil (PSO).
	Total	**1.000**	

Notes:

1) Any fluctuation in the indices or prices of materials other than those given above shall not be subject to adjustment of the Contract Price.

Annexure - 04

Scope of Works

1. Location of Site:

"SBP BSC (Bank) Multan, LMQ Road, Pul Mouj Darya, Multan"

2. Major Items of Contract:

Included but not limited to

1. Excavation and Refilling Works
2. Barricade Works
3. Reinforced Concrete Jacketting of columns
4. Existing RC Column CFRP Confinement and Flexural Repair
5. Existing RC Beams CFRP Shear and Flexural Repair
6. Architectural restoration of columns & beams, including surface finishing, plaster/putty, texture matching, painting or final finish to match existing architectural appearance.
7. Repair of various cracks in Walls of the Building
8. Water Proofing Works
9. Punch List works & Handing/Taking Over

PUBLIC PROCUREMENT REGULATORY AUTHORITY (PPRA) EPADS

Construction Schedule
Completion / Delivery Time: 540 Days

Bidder shall provide a program in a bar-chart showing the sequence of work items by which he proposes to complete the Works of the entire Contract. The program should indicate the sequence of work items and the period during which he proposes to complete the Works including the activities like designing, schedule of submitting drawings, ordering and procurement of materials, manufacturing, delivering, construction of civil works, erection, testing and commissioning of Works to be supplied under the Contract. The proposed sequence of execution of various sections of the project shall be according to the given Key Performance Indicators (KPIs) as follows.

Sr. No.	Description of Activity	Total Days	Start Date	Finish Date	0-90	91-180	181-270	271-360	361-450	451-540
1	Excavation and Refilling Works	60								
2	Barricade Works (Upon approval)	20								
3	Reinforced Concrete Jacketting of selected columns	210								
4	Existing RC Column CFRP Confinement and Flexural Repair	210								
5	Existing RC Beams CFRP Shear and Flexural Repair	210								
6	Architectural restoration of columns & beams, including surface finishing, plaster/putty, texture matching, painting or final finish to match existing architectural appearance.	210								
7	Repair of various cracks in Walls of the Building	90								
8	Water Proofing Works	210								
9	Punch List works & Handing/Taking Over	30								

The above Key Performance Indicators should be taken into consideration by the bidder in order to execute the works.

If the above KPI is not acceptable to any bidder, the bidder will prepare its own Work Program along with detailed justification for its change. Bids without above given Work Program or bidder's own proposed Work Program without justification shall not be considered responsive.

Annexure - 05

DRAWINGS FOR STRENGTHENING OF THE EXISTING ANNEXE BUILDING AT STATE BANK - BANKING SECTOR CORPORATE OFFICE, MULTAN

DRAWINGS

PUBLIC PROCUREMENT REGULATORY AUTHORITY (PPRA) EPADS

DRAWING LIST

SR. NO.	DESCRIPTION	DRAWING NO.
1	GENERAL NOTES - (SHEET 1 OF 2)	SBP / GN / 001
2	GENERAL NOTES - COLUMNS & BEAMS STRENGTHENING - (SHEET 2 OF 2)	SBP / GN / 001
3	EXISTING FOOTING / BASEMENT - COLUMNS & BEAMS, STRENGTHENING PLAN & DETAILS	SBP / RP / 001
4	EXISTING GROUND FLOOR - COLUMNS & BEAMS , STRENGTHENING PLAN & DETAILS	SBP / RP / 002
5	EXISTING FIRST FLOOR - COLUMNS & BEAMS, STRENGTHENING PLAN & DETAILS	SBP / RP / 003
6	EXISTING SECOND FLOOR - COLUMNS & BEAMS, STRENGTHENING PLAN & DETAILS	SBP / RP / 004
7	EXISTING TOP / ROOF - COLUMNS & BEAMS, STRENGTHENING PLAN & DETAILS	SBP / RP / 005
8	EXISTING COLUMNS - RC JACKETING STRENGTHENING SECTIONS - (SHEET 1 OF 4)	SBP / RP / 006
9	EXISTING COLUMNS - FRP STRENGTHENING - (SHEET 2 OF 4)	SBP / RP / 007
10	EXISTING COLUMNS - FRP STRENGTHENING - (SHEET 3 OF 4)	SBP / RP / 008
11	EXISTING FOUNDATION & COLUMNS - RC JACKETING STRENGTHENING - (SHEET 4 OF 4)	SBP / RP / 009
12	TYPICAL BEAMS - STRENGTHENING ELEVATION & SECTIONS - (SHEET 1 OF 3)	SBP / RP / 010
13	TYPICAL BEAMS - STRENGTHENING ELEVATION & SECTIONS - (SHEET 2 OF 3)	SBP / RP / 011
14	TYPICAL BEAMS - STRENGTHENING ELEVATION & SECTIONS - (SHEET 3 OF 3)	SBP / RP / 012
15	TYPICAL CRACKS IN WALL & REPAIRING - (SHEET 1 OF 3)	SBP / RP / 013
16	TYPICAL CRACKS IN WALL & REPAIRING - (SHEET 2 OF 3)	SBP / RP / 014
17	TREATMENT OF MASONRY WALL PANELS WITH LARGE SCALE CRACKING CRACK WIDTH > 3 mm - (SHEET 3 OF 3)	SBP / RP / 015

CLIENT:	PROJECT TITLE:	NOTES:	DRAWING TITLE:	DRAWING NO:	
STATE BANK OF PAKISTAN PUL MOAJ DARYA, LMQ ROAD, MULTAN	DETAILED INVESTIGATION OF CRACKS IN THE ANNEX C BUILDING OF STATE BANK & PROVISION OF REMEDIAL MEASURES		**LIST OF DRAWINGS**	-	
				DATE: Feb, 2026	SCALE: NTS

GENERAL NOTES

STRUCTURAL REPAIR & STRENGTHENING WORKS (JACKETING & FRP)

1. GENERAL

1. ALL REPAIR AND STRENGTHENING WORKS SHALL BE CARRIED OUT IN ACCORDANCE WITH APPROVED DRAWINGS, SPECIFICATIONS, AND RECOMMENDATIONS OF THE SUPPLIER PROVIDING THE REPAIR MATERIALS.
2. MATERIALS SHALL BE SUPPLIED, STORED, MIXED, AND APPLIED STRICTLY AS PER MANUFACTURER TECHNICAL DATA SHEETS.
3. CONTRACTOR SHALL SUBMIT METHOD STATEMENT, PRODUCT DATA SHEETS, AND MATERIAL SAMPLES FOR APPROVAL PRIOR TO COMMENCEMENT OF WORKS.
4. ALL WORKS SHALL COMPLY WITH RELEVANT PROVISIONS OF ACI 440, ACI 546, ACI 562 AND APPLICABLE INTERNATIONAL STANDARDS.

2. SURFACE PREPARATION

1. THE EXISTING FINISHES AND PLASTER SHALL BE REMOVED FORM THE STRUCTURE MEMBERS TO BE STRENGTHENED.
2. ALL DETERIORATED, LOOSE, DELAMINATED, OR CONTAMINATED CONCRETE SHALL BE REMOVED UNTIL SOUND SUBSTRATE IS ACHIEVED.
3. CONCRETE SURFACES SHALL BE PREPARED BY GRIDNDING AND SAND BLASTING TO ACHIEVE A CONCRETE SURFACE PROFILE (CSP) OF 3 TO 5 AS PER RECOMMENDATIONS OF INTERNATIONAL CONCRETE REPAIR INSTITUTE (ICRI) I.E. MAXIMUM ROUGHNESS SHALL NOT BE MORE THAN 1.0mm.
4. REINFORCEMENT STEEL SHALL BE CLEANED BY SAND BLASTING OR MECHANICAL CLEANING TO REMOVE RUST, SCALE, GREASE, AND CONTAMINANTS.
5. SURFACE SHALL BE FREE FROM DUST, LAITANCE, OIL, CURING COMPOUNDS, OR ANY BOND INHIBITING MATERIALS BEFORE APPLICATION OF REPAIR MATERIALS.
6. THE CORNERS OF COLUMNS AND BEAMS TO RECEIVE FRP STRENGTHENING SHALL BE ROUNDED TO HAVE RADIUS OF ¾ INCHES.

3. REINFORCEMENT TREATMENT

1. EXPOSED REINFORCEMENT SHALL BE CLEANED TO NEAR WHITE METAL FINISH.
2. APPLY APPROVED CORROSION PROTECTION COATING (E.G., EPOXY OR CEMENTITIOUS ANTI-CORROSION COATING) ON REINFORCEMENT BEFORE REPAIR MORTAR OR CONCRETE PLACEMENT.
3. ADDITIONAL REINFORCEMENT, WHERE REQUIRED, SHALL BE ANCHORED USING APPROVED CHEMICAL ANCHORING SYSTEM.
4. ALL ANCHOR HOLES SHALL BE DRILLED AND CLEANED USING AIR AND BRUSH PRIOR TO INSTALLATION OF ANCHORS.

4. CONCRETE JACKETING WORKS

1. EXISTING CONCRETE SURFACE SHALL BE PREPARED AND ROUGHENED PRIOR TO JACKETING WORKS.
2. SHEAR CONNECTORS / DOWELS SHALL BE INSTALLED AS SHOWN IN DRAWINGS USING APPROVED CHEMICAL ANCHOR ADHESIVE.
3. BONDING AGENT SHALL BE APPLIED PRIOR TO PLACEMENT OF REPAIR CONCRETE OR MICRO-CONCRETE.
4. REPAIR CONCRETE / MICRO-CONCRETE SHALL BE NON-SHRINK, HIGH STRENGTH, AND FLOWABLE.
5. PROPER COMPACTION SHALL BE ENSURED TO ELIMINATE VOIDS BY RODDING AND APPLYING VIBRATOR TO THE EXTERNAL SURFACE OF THE FORM WORK.
6. ADEQUATE CURING SHALL BE MAINTAINED FOR THE DURATION RECOMMENDED BY MANUFACTURER OF THE REPAIR MATERIALS.

5. FRP STRENGTHENING WORKS

1. FRP SYSTEM SHALL BE INSTALLED ONLY BY TRAINED AND APPROVED APPLICATORS.
2. CONCRETE SUBSTRATE STRENGTH SHALL MEET MINIMUM MANUFACTURER REQUIREMENTS BEFORE FRP APPLICATION. THIS SHALL BE DEMONSTRATED BY TESTS IN THE FIELDS.
3. SURFACE SHALL BE SMOOTH, LEVEL, AND FREE FROM SHARP EDGES.
4. PRIMER, PUTTY, RESIN, AND FRP FABRIC SHALL BE APPLIED IN SEQUENCE AS PER APPROVED SYSTEM.
5. AIR VOIDS AND WRINKLES SHALL NOT BE PERMITTED IN FRP LAMINATES.
6. FRP LAYERS SHALL BE PROTECTED FROM MECHANICAL DAMAGE, MOISTURE, AND UV EXPOSURE WHERE REQUIRED.
7. OVERLAPPING OF FRP SHEETS SHALL BE AS PER MANUFACTURER RECOMMENDATIONS.

6. MATERIAL REQUIREMENTS

4. REPAIR MORTAR SHALL BE COMPATIBLE WITH EXISTING CONCRETE.
5. CHEMICAL ANCHORING ADHESIVE SHALL BE HIGH STRENGTH STRUCTURAL GRADE EPOXY.
6. ALL MATERIALS SHALL BE WITHIN SHELF LIFE AND STORED UNDER RECOMMENDED CONDITIONS.

7. QUALITY CONTROL

1. MOCK-UP TRIALS MAY BE REQUIRED PRIOR TO EXECUTION OF ACTUAL REPAIR WORKS.
2. PULL-OUT TESTS SHALL BE CONDUCTED FOR ANCHORS WHERE SPECIFIED.
3. SUBSTRATE TESTING MAY BE CONDUCTED TO VERIFY SURFACE TENSILE STRENGTH.
4. INSPECTION SHALL BE CARRIED OUT AT EACH STAGE OF REPAIR AND STRENGTHENING WORKS.

8. SAFETY & PROTECTION

1. ALL SAFETY PRECAUTIONS SHALL BE FOLLOWED DURING DRILLING AND APPLICATION OF CHEMICAL MATERIALS.
2. ADJACENT STRUCTURAL COMPONENTS SHALL BE PROTECTED FROM DAMAGE DURING REPAIR WORKS.
3. REPAIR AREAS SHALL BE PROTECTED FROM VIBRATION, IMPACT, AND ENVIRONMENTAL EXPOSURE DURING CURING.
4. THE CONTRACTOR'S STAFF SHALL WEAR PERSONAL PROTECTIVE EQUIPMENT (PPE), WHICH SHALL INCLUDE HARD HAT, SAFETY SHOES, REFLECTIVE VEST AND SAFETY GLASSES AND GLOVES (AS REQUIRED).
5. THE CONTRACTOR SHALL INSTALL PROPER SCAFFOLDING FOR WORKS ENSURING THE SAFETY OF THE WORKERS.

9. SUPPORT OF STRUCTURAL MEMBERS

1. THE STRUCTURAL MEMBERS (COLUMNS, BEAM) CAN BE VULNERABLE TO LOADS DURING STRENGTHENING AND REPAIRING, AND MAY REQUIRE TO BE SUPPORTED OR ISOLATED.
2. THE CONTRACTOR SHALL SUPPORT THE STRUCTURAL MEMBERS BY BRACING, SHORING OR INSTALLATION OF JACKS.

10. CONCRETE

1. REINFORCED CONCRETE MATERIALS SHALL CONFORM TO THE FOLLOWING UNLESS OTHERWISE NOTED ON THE DRAWING:-
   - (i) CEMENT SHALL CONFORM TO ASTM C-150 TYPE-1 (ORDINARY PORTLAND CEMENT)
   - (ii) AGGREGATE SHALL CONFORM TO THE "STANDARD SPECIFICATIONS FOR CONCRETE AGGREGATE ASTM C33
   - (iii) WATER SHALL BE FREE FROM OIL OR OTHER MATERIALS THAT CAN ADVERSELY AFFECT CONCRETE STRENGTH OR DURABILITY FINISH.
2. ALL CONCRETE SURFACES IN CONTACT WITH SOIL SHALL BE BITUMEN COATED (2 COATS).
3. ALL CORNERS/EDGES OF CONCRETE COLUMNS OR EXPOSED SURFACES SHOULD BE CHAMFERED TO 15mm IF SPECIFIED ON DRAWING.
4. ALL CONCRETE EXPOSED SURFACES SHALL HAVE FAIR FACE FINISH. ALL CONCRETE SURFACES BURIED INTO GROUND MAY HAVE ORDINARY FINISH.
5. CONCRETE SHALL HAVE THE FOLLOWING 28 DAYS COMPRESSIVE CYLINDER STRENGTH AND SHALL CONFORM TO BUILDING CODE REQUIREMENTS FOR REINFORCED CONCRETE ACI- 318-2014 (CUBE STRENGTH GIVEN IN PARENTHESIS)
   - (i) PLAIN CEMENT CONCRETE (BLINDING) CONCRETE (1:4:8)1200 Psi. (1500 Psi)
   - (ii) CONCRETE FOR JACKETING OF COLUMNS AND BEAMS 4000psi (5000 CUBE)
6. ALL CONCRETE SHALL BE CONSOLIDATED AFTER PLACING USING VIBRATOR.
7. ALL CONCRETE SHALL BE CURED FOR 14 DAYS AFTER PLACEMENT AND INITIAL SETTING BY SPRINKLING OF WATER OR COVERING THE CONCRETE ELEMENTS WITH WET BURLAP/JUTE CLOTH.

10. STRUCTURAL STEEL

1. ALL STRUCTURAL STEEL SHALL CNFORM TO REQUIREMENT OF ASTM A-36 AND SHALL HAVE YIELD STRENGTH EXCEEDING 36000 psi.

11. REINFORCEMENT

1. ALL REINFORCEMENT SHALL CONFORM TO ASTM A615-22 GRADE 60. REINFORCEMENT STEEL SHALL BE USED WITH MILL SCALE ATTACHED AND NOT MORE THAN A LIGHT RUST COVER. NO STEEL SHALL BE USED WHERE THE MILL SCALE IS ABSENT DUE TO RUST FLAKING.
2. CLEAR COVER TO REINFORCEMENT SHALL BE AS FOLLOWS (THE DIMENSIONS INDICATE THE CLEAR DISTANCE FROM THE EDGE OF THE SECONDARY REINFORCEMENT (TIES OR STIRRUPS) TO THE CONCRETE SURFACE.
   - (i) FOUNDATIONS (DIRECTLY IN CONTACT WITH SOIL) 3"
   - (ii) FOUNDATIONS ON BLINDING CONCRETE 2"
   - (iii) FOOTING BEAMS 2"
   - (iv) COLUMNS 1 1/2"
   - (v) BEAMS IN SUPER STRUCTURE 1 1/2"
   - (vi) SLABS IN SUPER STRUCTURE 3/4"
   - (vii) WALLS
   - (a) OUTER FACE OF RETAINING WALLS 2"
   - (b) ALL OTHER FACES INCLUDING LIFT WELL 3/4"
   - (c) WALLS FACES IN CONTACT WITH WATER 2"
3. FOR BAR SPLICES (LAP LENGTHS) REFER TO TABLE 1.
4. IT IS THE RESPONSIBILITY OF THE CONTRACTOR TO FIX ALL EMBEDDED ITEMS PRIOR TO START OF R.C.C. WORK.
5. PROVIDE #3 BARS @8" C/C FOR BINDING ALL TOP STEEL OF SLAB.
6. IN RAFT FOUNDATION TOP REINFORCEMENT LAP ON COLUMN LOCATION, AND BOTTOM REINFORCEMENT LAP BETWEEN COLUMNS.
7. IN COLUMN VERTICAL REINFORCEMENT LAP ON THE MID OF COLUMN.

TABLE-1

BARS SPLICE (LAP LENGTHS)

BAR USE	LAP LENGTHS	
	COLUMNS	BEAMS/ WALLS
#3	NOT USED	2'-6"
#4	NOT USED	3'-3"
#6	3'-6"	4'-6"
#8		7'-3"

12. CEMENT PLASTER

1. ALL EXTERNAL PLASTER SHALL BE 3/4" THICK AND ALL INTERNAL PLASTER SHALL BE 1/2" THICK UNLESS OTHERWISE NOTED.
2. USE CHENAB SAND FOR CEMENT PLASTER.
3. CEMENT SAND RATIO FOR PLASTER WORKS SHALL BE AS FOLLOWS:
   - (i) CONCRETE POURED WITH WOODEN FORMWORK
     - a) CEILING 1:4
     - b) WALLS 1:4
   - (ii) CONCRETE POURED WITH STEEL PLATE FORMWORK
     - a) CEILING 1:3
     - b) WALLS 1:3
   - (iii) BRICK MASONRY EXT. AND INT. 1:4

13. WATER QUALITY

1. FOR CONSTRUCTION WORK, CLEAN POTABLE WATER FREE FROM PHYSICAL, CHEMICAL, AND BIOLOGICAL CONTAMINANTS SUCH AS SILT, SALTS, ACIDS, CHLORIDES, SULPHATES, AND ORGANIC MATTER IS USED TO ENSURE STRENGTH AND DURABILITY OF CONCRETE.

CLIENT:	PROJECT TITLE:	NOTES:	DRAWING TITLE:	DRAWING NO:
STATE BANK OF PAKISTAN PUL MOAJ DARYA, LMQ ROAD, MULTAN	DETAILED INVESTIGATION OF CRACKS IN THE ANNEX C BUILDING OF STATE BANK & PROVISION OF REMEDIAL MEASURES		**GENERAL NOTES** SHEET 1 OF 2	SBP / GN / 001 DATE: Feb, 2026 SCALE: NTS

COLUMN / BEAM STRENGTHENING

1. RC JACKET STRENGTHENING

- THE EXISTING FINISHES (TILES, CLADDING) AND PLASTER SHALL BE REMOVED FROM THE COLUMN TO BE PROVIDED WITH RC JACKET AND STRUCTURAL CONCRETE EXPOSED.
- THE EXPOSED STRUCTURAL CONCRETE SURFACE SHALL BE CLEANED OF ALL LAITANCE AND DELETERIOUS MATERIAL BY CHIPPING HAMMERS AND SAND BLASTING AS REQUIRED.
- THE ACHIEVED SURFACE SHALL HAVE A CONCRETE SURFACE PROFILE OF 6-10 AS PER GUIDELINES OF INTERNATIONAL CONCRETE REPAIR INSTITUTE, i.e., ROUGHNESS SHALL BE IN THE RANGE OF 3-6 mm.
- THE CORNERS OF THE EXISTING COLUMN SHALL BE ROUNDED TO A RADIUS OF 15mm, (⅝" INCH).
- PRIOR TO PLACEMENT OF THE RC JACKET, THE COLUMN SHALL BE WASHED BY A PRESSURE WASHER AND ITS SURFACE SHOULD BE IN MOIST DRY CONDITION.
- ALL THE HOLES DRILLED FOR INSTALLATION OF THE ANCHORS SHALL BE CLEANED BY PRESSURIZED AIR AND WIRE BRUSH PRIOR TO PLACEMENT OF THE ANCHORING ADHESIVE.
- THE ADHESIVE USED FOR ANCHORING THE ANCHORS SHALL BE SIKA ANCHOR FIX-2 (OR AN APPROVED EQUIVALENT)
- THE CONCRETE USED FOR RC JACKETING SHALL HAVE MINIMUM 28 DAYS CYLINDRICAL COMPRESSIVE STRENGTH OF 4000 psi.
- THE MAXIMUM AGGREGATE SIZE OF THE COARSE AGGREGATE TO BE USED IN THE CONCRETE OF THE JACKET SHALL NOT BE MORE THAN ½ INCH (12.5 mm).
- SIKA VISCOCRETE-20 HE (OR APPROVED EQUIVALENT) SHALL BE USED TO ACHIEVE A FOLLOWING SELF CONSOLIDATING CONCRETE WITH WATER CEMENT RATIO NOT EXCEEDING 0.35.
- THE SLUMP FLOW DIAMETER OF THE SELF-CONSOLIDATING CONCRETE SHALL BE IN THE RANGE OF 550mm TO 700mm.
- THE RC JACKET SHALL BE PLACED IN THREE LIFTS AS DESCRIBED BELOW:
  - 1st LIFT / POUR APPROXIMATELY UP TO THE MID HEIGHT OF THE COLUMN.
  - 2nd LIFT / POUR FROM TOP OF THE 1st LIFT UP TO THE TOP OF THE COLUMN, LEAVING THE TOP 2ft. UN CAST.
  - THE 3rd AND THE TOP LIFT OF THE RC JACKET SHALL BE CAST USING SIKA MONOTOP-612 (OR AN APPROVED EQUIVALENT)
- THE POURED SELF CONSOLIDATING CONCRETING SHALL BE RODED AND VIBRATOR SHALL BE APPLIED EXTERNALLY TO FORMWORK TO ASSURE PROPER CONSOLIDATION OF CONCRETE AND AVOIDING HONEYCOMBING.
- THE COLUMN SHALL BE RESTORED TO ITS ORIGINAL APPEARANCE BY APPLYING FINISHES EQUAL OR BETTER THAN THE ORIGINAL FINISHES REMOVED.

2. FRP STRENGTHENING

- THE EXISTING FINISHED (TILES, CLADDING, AND PLASTER SHALL BE REMOVED FROM THE COLUMN WHICH IS TO BE STRENGTHENED BY APPLICATION OF FRP.
- THE ACHIEVED SURFACE SHALL HAVE A CONCRETE SURFACE SHALL HAVE A CONCRETE SURFACE PROFILE OF 3-5 AS PER GUIDELINES OF INTERNATIONAL CONCRETE REPAIR INSTITUTE (ICRI), i.e., ROUGHNESS SHALL NOT BE MORE THAN 1.0 mm.
- THE CORNERS OF COLUMNS AND BEAMS TO BE STRENGTHENED BY FRP SHALL BE ROUNDED TO A RADIUS OF ¾ INCHES (20 mm).
- FOR APPLICATION OF SIKA WRAP-230 - SIKADUR-330 (OR AN APPROVED EQUIVALENT) SHALL BE USED FOR APPLICATION OF PRIME COAT AND SUBSEQUENT LAYERS OF SIKA WRAP-230.
- AFTER APPLICATION OF SIKA WRAP A COAT OF SIKADUR-330 SHALL BE APPLIED. CLEAN SILICA SAND OR QUARTZ SHALL BE APPLIED TO THE FINISHED SURFACE. THE SURFACE SHALL BE ALLOWED TO HARDEN. AFTERWARDS EXTRA SAND SHALL BE BRUSHED OFF.
- THE REPAIRED COLUMN SHALL BE PROTECTED BY APPLICATION OF CEMENT SAND MORTAR (14: RATIO).
- THE STRUCTURAL MEMBER STRENGTHENED SHALL BE RESTORED BY APPLYING THE FINISHES EQUAL OR BETTER THAN THE ORIGINAL FINISHES REMOVED.

FOR APPLICATION OF SIKA CARBODUR STRIPS.

- THE FRP LAMINATE STRIP SHALL BE CLEANED USING ACETONE TO REMOVE ALL GREASE AND OILS TILL THE WIPING CLOTH REMAINS WHITE.
- THE FRP LAMINATED STRIP SHALL BE BONDED TO THE SUBSTRATE USING SIKADUR-30 (OR AN APPROVED EQUIVALENT).
- THE SUBSEQUENT LAYERS IF REQUIRED SHALL ALSO BE APPLIED ON TOP OF THE EXISTING LAYERS USING SIKADUR-30.
- APPLY SIKADUR-330 TO FRP LAMINATE AND WRAP WITH SIKA WRAP.

LIST OF MATERIALS TO BE USED IN STRENGTHENING OF COLUMNS & BEAMS

SR. NO.	MATERIAL	DESCRIPTION
1	SIKA ANCHOR FIX-2	EPOXY FOR AFFIXING STEEL ANCHORS AND REBARS TO EXISTING CONCRETE
2	SIKA VISOCRETE -20 HE	LIQUID ADMIXTURE TO PREPARE SELF-CONSOLIDATING CONCRETE
3	SIKA MONOTOP-612	I-COMPONENT FIBER-REINFORCED STRUCTURAL REPAIR MORTAR CONTAINING SILICA FUME
4	SIKA WRAP-230	UNIDIRECTIONAL WOVEN CARBON FIBER FABRIC FOR CONFINEMENT OF COLUMNS AND SHEAR STRENGTHENING OF RC BEAMS
5	SIKA WRAP-600	UNIDIRECTIONAL WOVEN CARBON FIBER FABRIC FOR CONFINEMENT OF COLUMNS AND SHEAR STRENGTHENING OF RC BEAMS
6	SIKADUR-330	2-PART THIXOTROPHIC, EMPOXY-BASED IMPREGNATING / LAMINATING RESIN FOR APPLICATION OF SIKA WRAP FABRIC
7	SIKA CARBODUR-S1012	PULTIUDED CARBON FIBER REINFORCEMENT POLYMER (CFRP) STRENGTHENING OF BEAMS & COLUMNS
8	SIKADUR-30	THIXOLROPIC, STRUCTURAL 2 COMPONENT ADHESIVE BASED ON COMBINATION OF EPOXY RESINS AND SPECIAL FILLERS DESIGNED FOR AFFIXATION OF SIKA CARBODUR LAMINATES

PUBLIC PROCUREMENT REGULATORY AUTHORITY (PPRA) EPADS

CLIENT:	PROJECT TITLE:	NOTES:	DRAWING TITLE:	DRAWING NO:	
STATE BANK OF PAKISTAN PUL MOAJ DARYA, LMQ ROAD, MULTAN	DETAILED INVESTIGATION OF CRACKS IN THE ANNEX C BUILDING OF STATE BANK & PROVISION OF REMEDIAL MEASURES		**GENERAL NOTES** COLUMN / BEAM STRENGTHENING SHEET 2 OF 2	SBP / GN / 002	
				DATE: Feb, 2026	SCALE: NTS

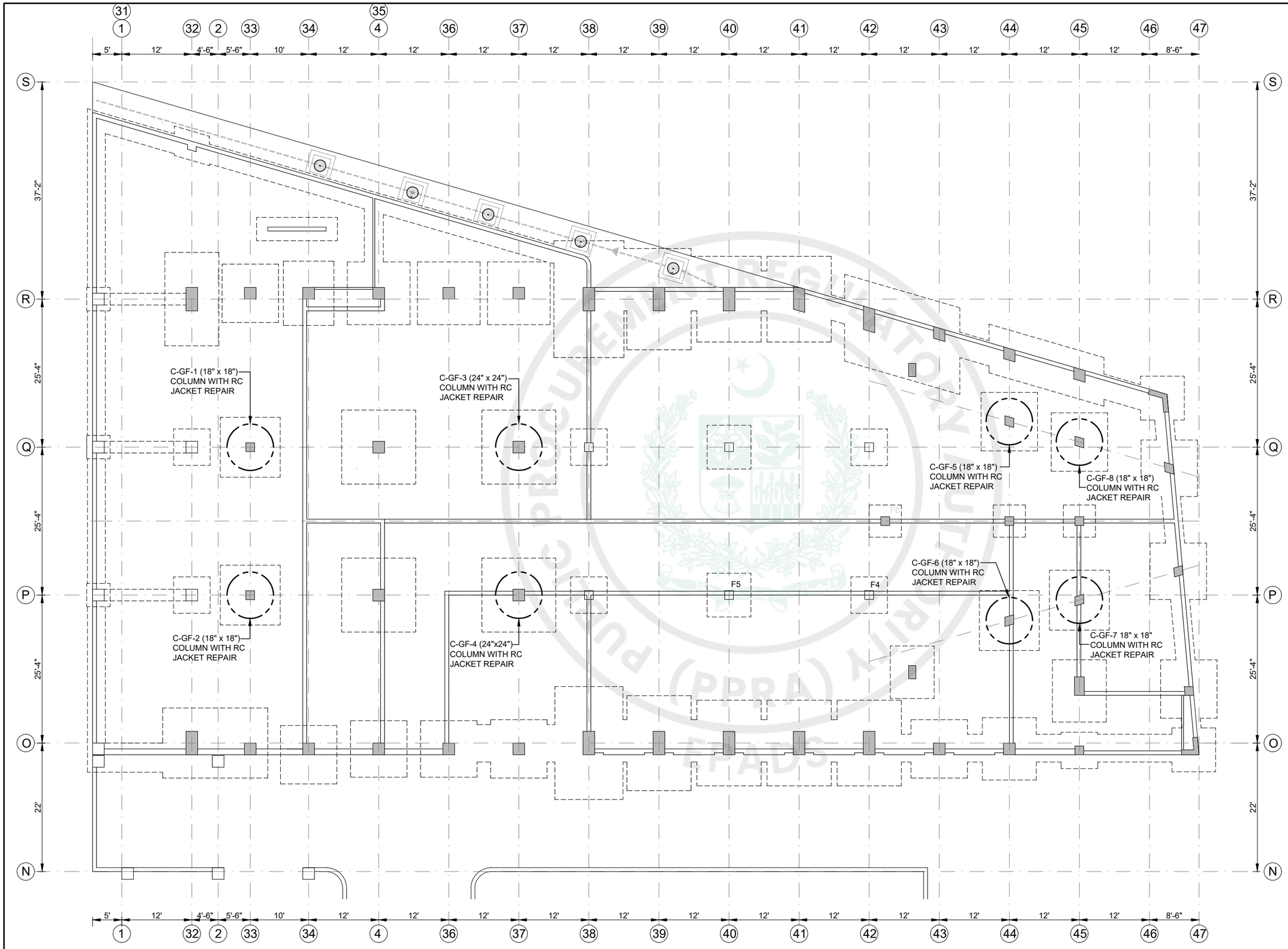

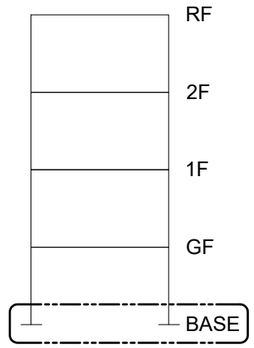

NOTES:

1. ALL DIMENSIONS AND ELEVATIONS ARE IN FEET-INCHES FORMAT UNLESS NOTED OTHERWISE.
2. PLANS IDENTIFY STRUCTURAL MEMBERS (BEAMS, COLUMNS) WHICH REQUIRE EITHER STRENGTHENING BY RC JACKET OR BY FRP WRAP.
3. FOR GENERAL & STRUCTURAL REPAIR & STRENGTHENING WORKS (JACKETING & FRP) NOTES SEE DWG. NO. SBP-GN-001 & 002.

LEGEND:

BASE	BASEMENT
GF	GROUND FLOOR SLAB
1F	FIRST FLOOR SLAB
2F	SECOND FLOOR SLAB
RF	ROOF FLOOR SLAB
	COLUMN WITH RC JACKET STRENGTHENING
	COLUMN WITH FRP WRAP CONFINEMENT STRENGTHENING
	COLUMN WITH FLEXURAL STRENGTHENING + FRP WRAPPING
TYPE=F	BEAM WITH FRP WRAP FLEXURAL STRENGTHENING
TYPE=V	BEAM WITH FRP WRAP SHEAR STRENGTHENING
TYPE=VF	BEAM WITH SHEAR AND FLEXURAL FRP STRENGTHENING BOTH
TYPE=V	BEAM WITH SHEAR FRP STRENGTHENING ONLY
TYPE=F	BEAM WITH FLEXURAL FRP STRENGTHENING ONLY
TYPE=VF	BEAM WITH SHEAR AND FLEXURAL FRP STRENGTHENING BOTH

CLIENT:	PROJECT TITLE:	NOTES:	DRAWING TITLE:	DRAWING NO:
STATE BANK OF PAKISTAN PUL MOAJ DARYA, LMQ ROAD, MULTAN	DETAILED INVESTIGATION OF CRACKS IN THE ANNEX C BUILDING OF STATE BANK & PROVISION OF REMEDIAL MEASURES		**EXISTING FOOTING / BASEMENT COLUMNS & BEAMS** STRENGTHENING PLAN & DETAILS	SBP / RP / 001
				DATE: Feb, 2026 / SCALE: ¼" = 1'-0"

e-Pak Acquisition and Disposal System (EPADS) generated document | © 2026

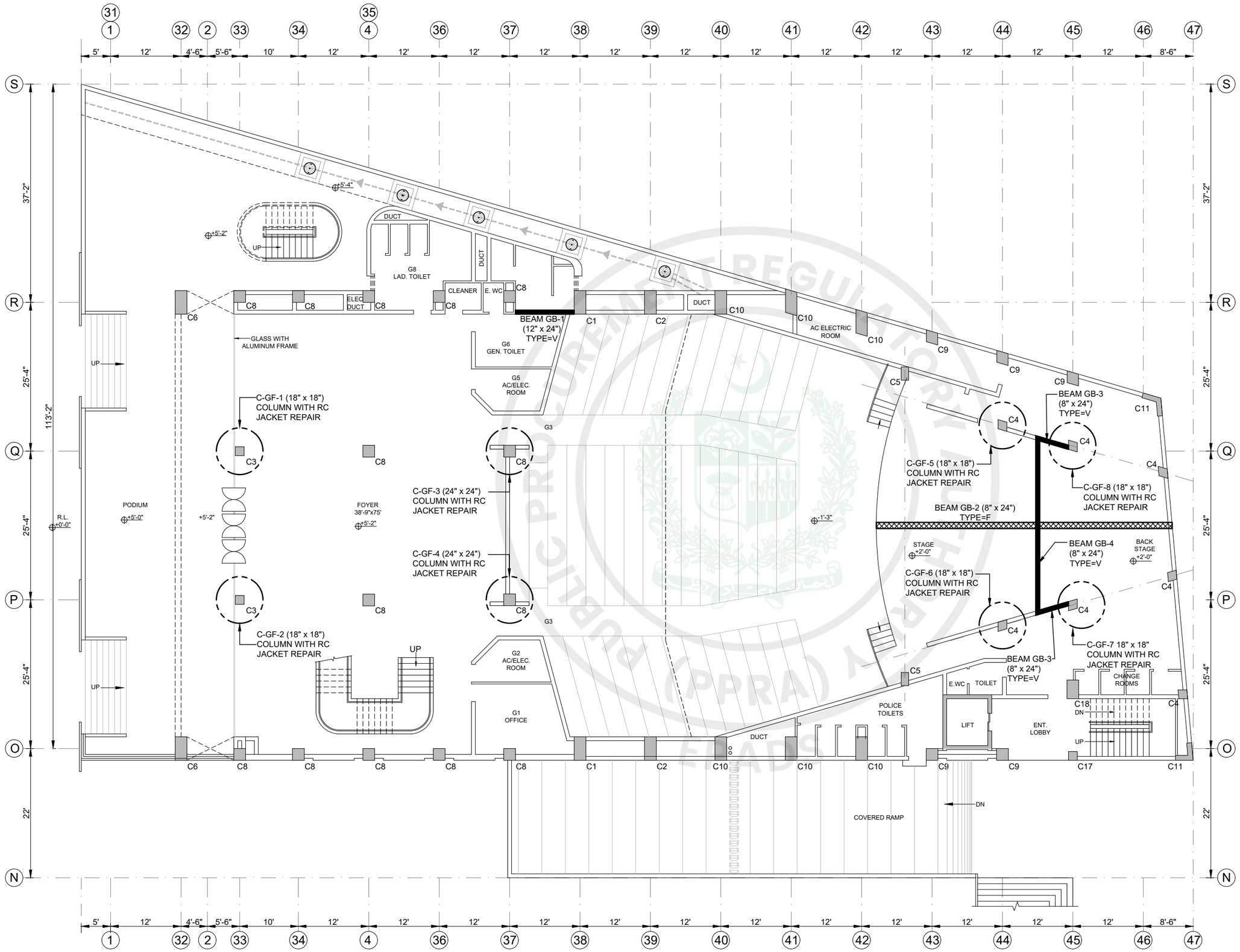

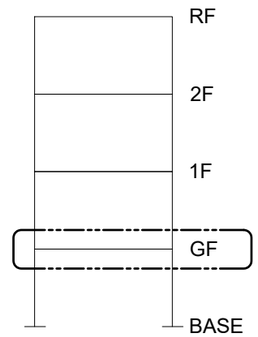

NOTES:

1. ALL DIMENSIONS AND ELEVATIONS ARE IN FEET-INCHES FORMAT UNLESS NOTED OTHERWISE.
2. PLANS IDENTIFY STRUCTURAL MEMBERS (BEAMS, COLUMNS) WHICH REQUIRE EITHER STRENGTHENING BY RC JACKET OR BY FRP WRAP.
3. FOR GENERAL & STRUCTURAL REPAIR & STRENGTHENING WORKS (JACKETING & FRP) NOTES SEE DWG. NO. SBP-GN-001 & 002.

LEGEND:

BASE	BASEMENT
GF	GROUND FLOOR SLAB
1F	FIRST FLOOR SLAB
2F	SECOND FLOOR SLAB
RF	ROOF FLOOR SLAB
	COLUMN WITH RC JACKET STRENGTHENING
	COLUMN WITH FRP WRAP CONFINEMENT STRENGTHENING
	COLUMN WITH FLEXURAL STRENGTHENING + FRP WRAPPING
TYPE=F	BEAM WITH FRP WRAP FLEXURAL STRENGTHENING
TYPE=V	BEAM WITH FRP WRAP SHEAR STRENGTHENING
TYPE=VF	BEAM WITH SHEAR AND FLEXURAL FRP STRENGTHENING BOTH
TYPE=V	BEAM WITH SHEAR FRP STRENGTHENING ONLY
TYPE=F	BEAM WITH FLEXURAL FRP STRENGTHENING ONLY
TYPE=VF	BEAM WITH SHEAR AND FLEXURAL FRP STRENGTHENING BOTH

CLIENT:
STATE BANK OF PAKISTAN
PUL MOAJ DARYA, LMQ ROAD, MULTAN

PROJECT TITLE:
DETAILED INVESTIGATION OF CRACKS IN THE ANNEX C BUILDING OF STATE BANK & PROVISION OF REMEDIAL MEASURES

NOTES:

DRAWING TITLE:
EXISTING GROUND FLOOR COLUMNS & BEAMS
STRENGTHENING PLAN & DETAILS

DRAWING NO: SBP / RP / 002

DATE: FEB, 2026

SCALE: 1/8" = 1'-0"

e-Pak Acquisition and Disposal System (EPADS) generated document | © 2026

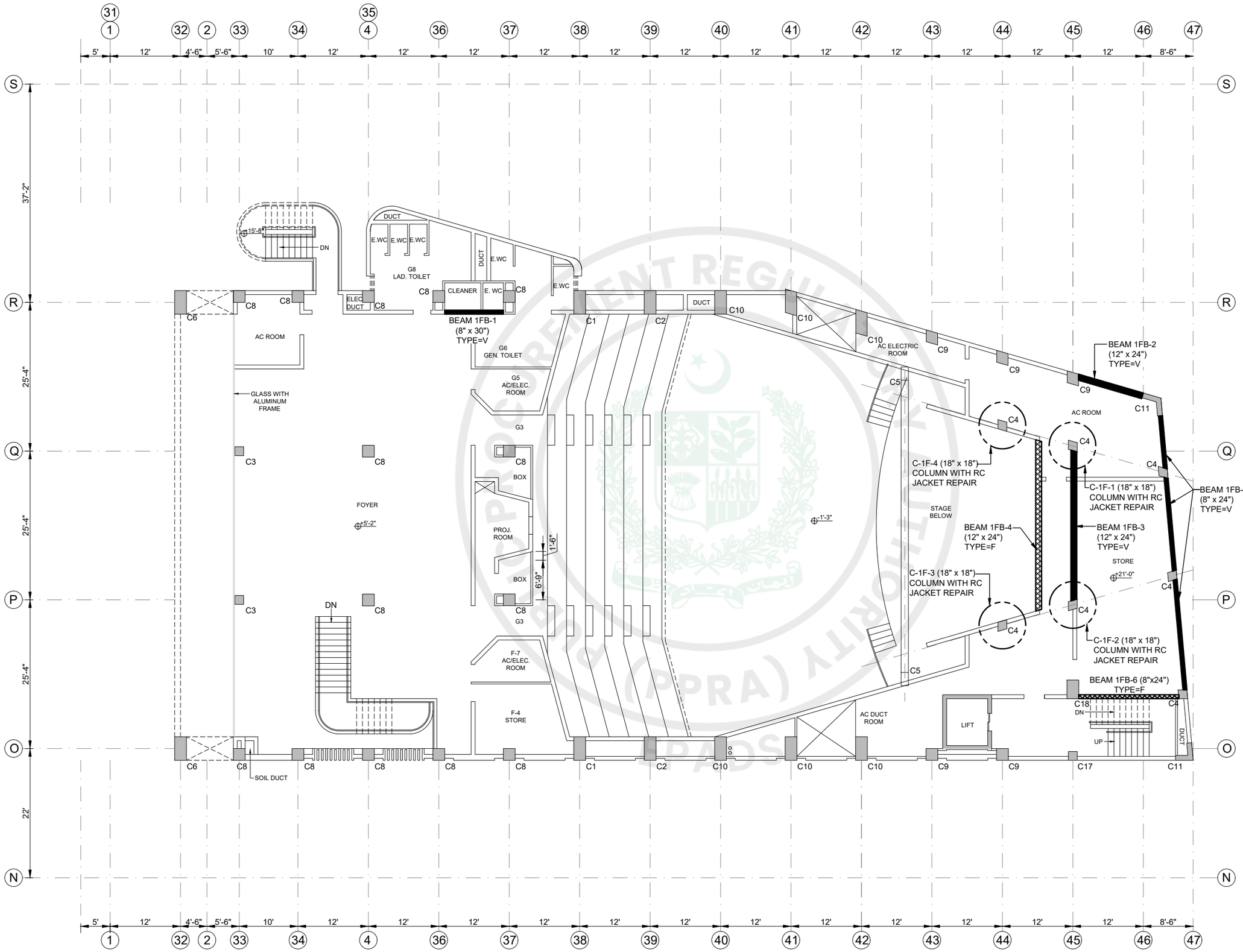

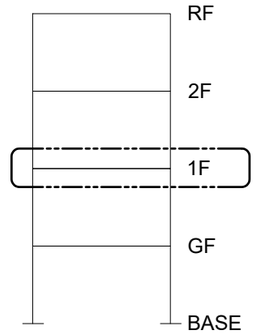

NOTES:

1. ALL DIMENSIONS AND ELEVATIONS ARE IN FEET-INCHES FORMAT UNLESS NOTED OTHERWISE.
2. PLANS IDENTIFY STRUCTURAL MEMBERS (BEAMS, COLUMNS) WHICH REQUIRE EITHER STRENGTHENING BY RC JACKET OR BY FRP WRAP.
3. FOR GENERAL & STRUCTURAL REPAIR & STRENGTHENING WORKS (JACKETING & FRP) NOTES SEE DWG. NO. SBP-GN-001 & 002.

LEGEND:

BASE	BASEMENT
GF	GROUND FLOOR SLAB
1F	FIRST FLOOR SLAB
2F	SECOND FLOOR SLAB
RF	ROOF FLOOR SLAB
	COLUMN WITH RC JACKET STRENGTHENING
	COLUMN WITH FRP WRAP CONFINEMENT STRENGTHENING
	COLUMN WITH FLEXURAL STRENGTHENING + FRP WRAPPING
TYPE=F	BEAM WITH FRP WRAP FLEXURAL STRENGTHENING
TYPE=V	BEAM WITH FRP WRAP SHEAR STRENGTHENING
TYPE=VF	BEAM WITH SHEAR AND FLEXURAL FRP STRENGTHENING BOTH
TYPE=V	BEAM WITH SHEAR FRP STRENGTHENING ONLY
TYPE=F	BEAM WITH FLEXURAL FRP STRENGTHENING ONLY
TYPE=VF	BEAM WITH SHEAR AND FLEXURAL FRP STRENGTHENING BOTH

CLIENT:	PROJECT TITLE:	NOTES:	DRAWING TITLE:	DRAWING NO:
STATE BANK OF PAKISTAN PUL MOAJ DARYA, LMQ ROAD, MULTAN	DETAILED INVESTIGATION OF CRACKS IN THE ANNEX C BUILDING OF STATE BANK & PROVISION OF REMEDIAL MEASURES		**EXISTING FIRST FLOOR COLUMNS & BEAMS** STRENGTHENING PLAN & DETAILS	SBP / RP / 003
			DATE: JULY, 2025	SCALE: 1/8" = 1'-0"

e-Pak Acquisition and Disposal System (EPADS) generated document | © 2026

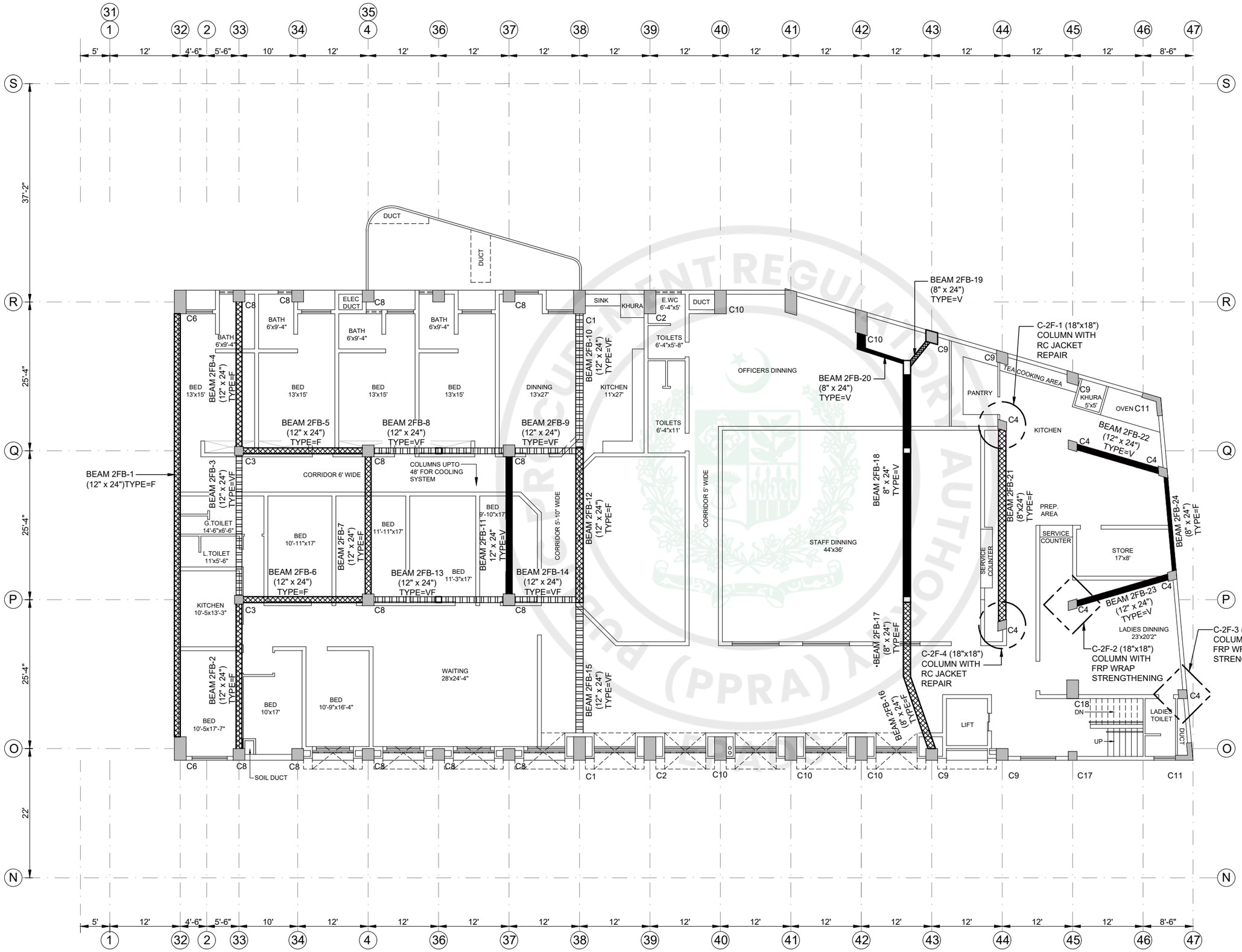

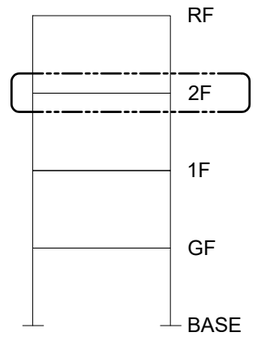

NOTES:

1. ALL DIMENSIONS AND ELEVATIONS ARE IN FEET-INCHES FORMAT UNLESS NOTED OTHERWISE.
2. PLANS IDENTIFY STRUCTURAL MEMBERS (BEAMS, COLUMNS) WHICH REQUIRE EITHER STRENGTHENING BY RC JACKET OR BY FRP WRAP.
3. FOR GENERAL & STRUCTURAL REPAIR & STRENGTHENING WORKS (JACKETING & FRP) NOTES SEE DWG. NO. SBP-GN-001 & 002.

LEGEND:

BASE	BASEMENT
GF	GROUND FLOOR SLAB
1F	FIRST FLOOR SLAB
2F	SECOND FLOOR SLAB
RF	ROOF FLOOR SLAB
○	COLUMN WITH RC JACKET STRENGTHENING
◇	COLUMN WITH FRP WRAP CONFINEMENT STRENGTHENING
□	COLUMN WITH FLEXURAL STRENGTHENING + FRP WRAPPING
TYPE=F	BEAM WITH FRP WRAP FLEXURAL STRENGTHENING
TYPE=V	BEAM WITH FRP WRAP SHEAR STRENGTHENING
TYPE=VF	BEAM WITH SHEAR AND FLEXURAL FRP STRENGTHENING BOTH
TYPE=V	BEAM WITH SHEAR FRP STRENGTHENING ONLY
TYPE=F	BEAM WITH FLEXURAL FRP STRENGTHENING ONLY
TYPE=VF	BEAM WITH SHEAR AND FLEXURAL FRP STRENGTHENING BOTH

CLIENT:	PROJECT TITLE:	NOTES:	DRAWING TITLE:	DRAWING NO:
STATE BANK OF PAKISTAN PUL MOAJ DARYA, LMQ ROAD, MULTAN	DETAILED INVESTIGATION OF CRACKS IN THE ANNEX C BUILDING OF STATE BANK & PROVISION OF REMEDIAL MEASURES		**EXISTING SECOND FLOOR COLUMNS & BEAMS** STRENGTHENING PLAN & DETAILS	SBP / RP / 004
			DATE: Feb, 2026	SCALE: ¼" = 1'-0"

e-Pak Acquisition and Disposal System (EPADS) generated document | © 2026

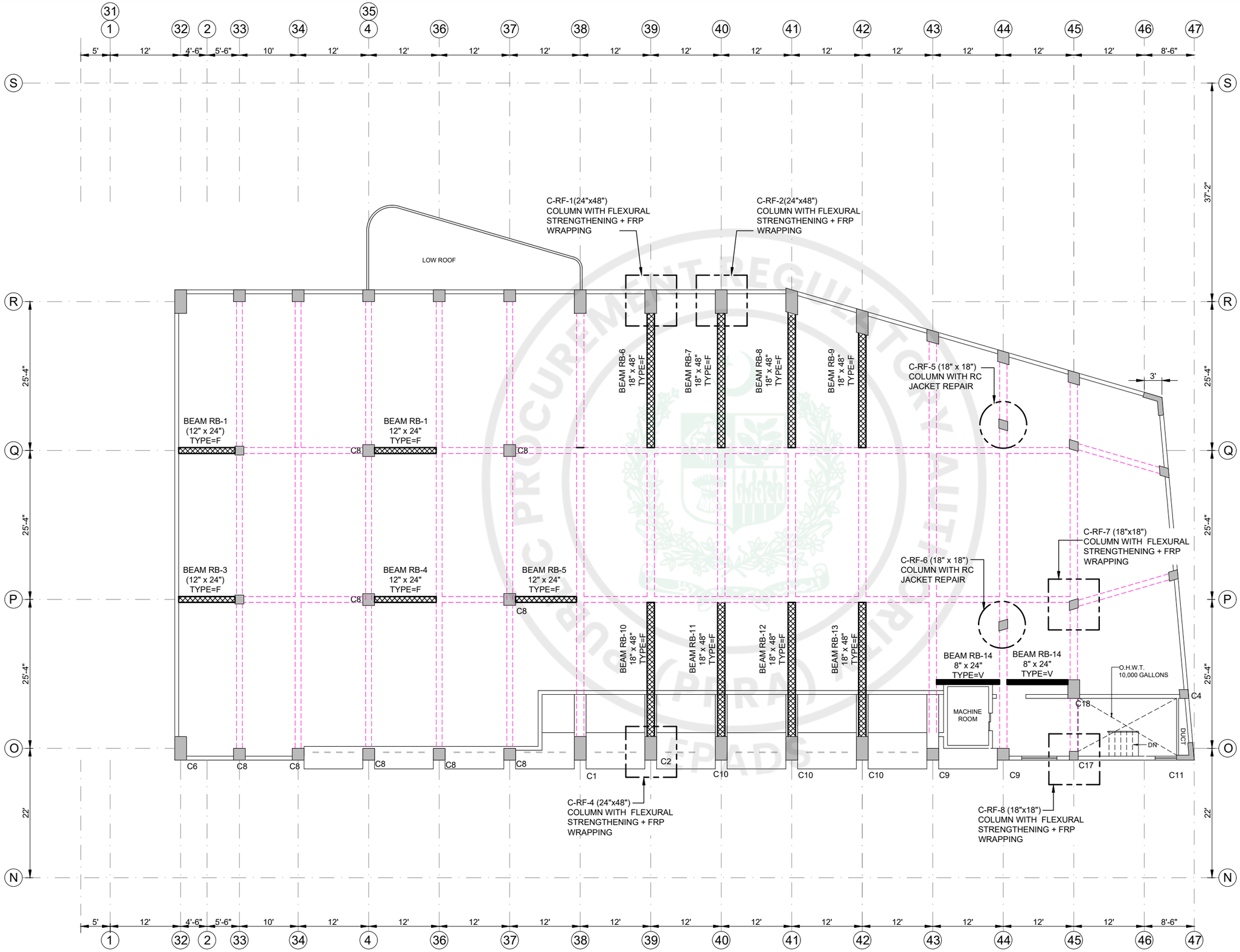

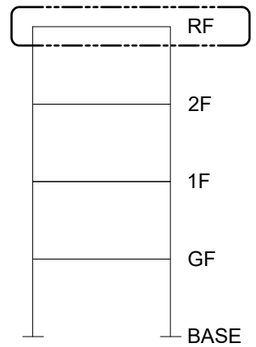

NOTES:

1. ALL DIMENSIONS AND ELEVATIONS ARE IN FEET-INCHES FORMAT UNLESS NOTED OTHERWISE.
2. PLANS IDENTIFY STRUCTURAL MEMBERS (BEAMS, COLUMNS) WHICH REQUIRE EITHER STRENGTHENING BY RC JACKET OR BY FRP WRAP.
3. FOR GENERAL & STRUCTURAL REPAIR & STRENGTHENING WORKS (JACKETING & FRP) NOTES SEE DWG. NO. SBP-GN-001 & 002.

LEGEND:

BASE	BASEMENT
GF	GROUND FLOOR SLAB
1F	FIRST FLOOR SLAB
2F	SECOND FLOOR SLAB
RF	ROOF FLOOR SLAB
	COLUMN WITH RC JACKET STRENGTHENING
	COLUMN WITH FRP WRAP CONFINEMENT STRENGTHENING
	COLUMN WITH FLEXURAL STRENGTHENING + FRP WRAPPING
TYPE=F	BEAM WITH FRP WRAP FLEXURAL STRENGTHENING
TYPE=V	BEAM WITH FRP WRAP SHEAR STRENGTHENING
TYPE=VF	BEAM WITH SHEAR AND FLEXURAL FRP STRENGTHENING BOTH
TYPE=V	BEAM WITH SHEAR FRP STRENGTHENING ONLY
TYPE=F	BEAM WITH FLEXURAL FRP STRENGTHENING ONLY
TYPE=VF	BEAM WITH SHEAR AND FLEXURAL FRP STRENGTHENING BOTH

CLIENT:	PROJECT TITLE:	NOTES:	DRAWING TITLE:	DRAWING NO:
STATE BANK OF PAKISTAN PUL MOAJ DARYA, LMQ ROAD, MULTAN	DETAILED INVESTIGATION OF CRACKS IN THE ANNEX C BUILDING OF STATE BANK & PROVISION OF REMEDIAL MEASURES		**EXISTING TOP / ROOF COLUMNS & BEAMS** STRENGTHENING PLAN & DETAILS	SBP / RP / 005
			DATE: Feb, 2026	SCALE: 1/8" = 1'-0"

e-Pak Acquisition and Disposal System (EPADS) generated document | © 2026

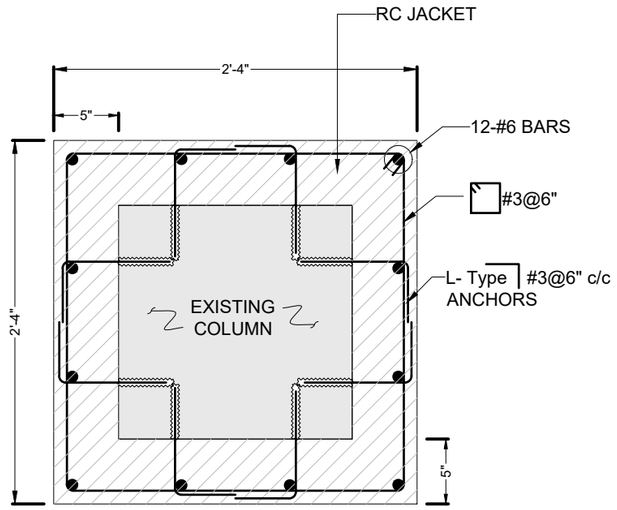

COLUMNS

(18"x18")

C-GF-1, C-GF-2, C-GF-5, C-GF-6, C-GF-7, C-GF-7

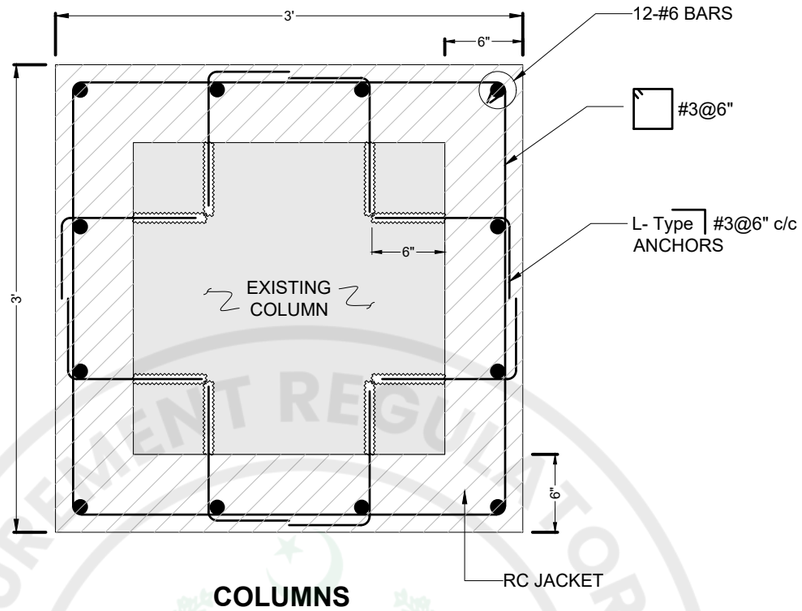

COLUMNS

(24"x24")

C-GF-3, C-GF-4

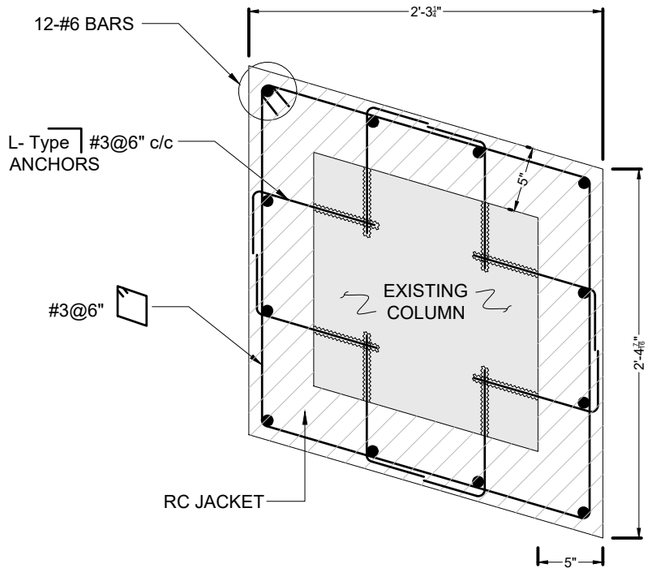

COLUMNS

(18"x18")

C-1F-1, C-1F-4, C-RF-5

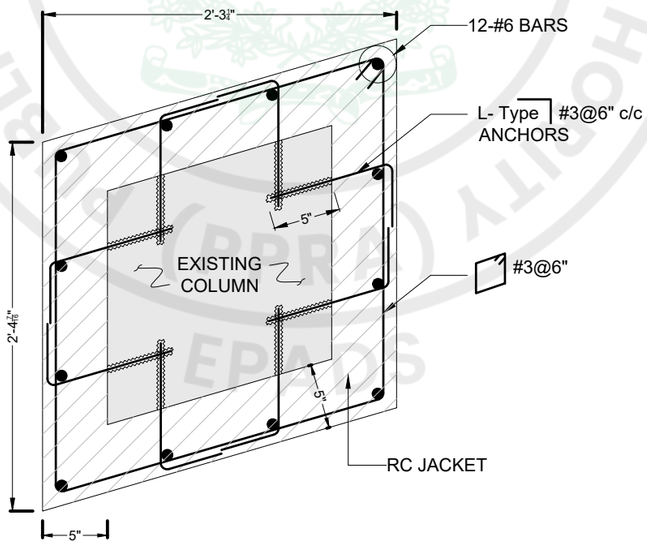

COLUMNS

(18"x18")

C-1F-2, C-1F-3, C-RF-6

NOTES

1. ALL DIMENSIONS AND ELEVATIONS ARE IN FEET-INCHES FORMAT UNLESS NOTED OTHERWISE.
2. PLANS IDENTIFY STRUCTURAL MEMBERS (BEAMS, COLUMNS) WHICH REQUIRE EITHER STRENGTHENING BY RC JACKET OR BY FRP WRAP.
3. FOR GENERAL & STRUCTURAL REPAIR & STRENGTHENING WORKS (JACKETING & FRP) NOTES SEE DWG. NO. SBP-GN-001 & 002.

RC JACKET COLUMN STRENGTHENING

- THE EXISTING FINISHES (TILES, CLADDING) AND PLASTER SHALL BE REMOVED FROM THE COLUMN TO BE PROVIDED WITH RC JACKET AND STRUCTURAL CONCRETE EXPOSED.
- THE EXPOSED STRUCTURAL CONCRETE SURFACE SHALL BE CLEANED OF ALL LAITANCE AND DELETERIOUS MATERIAL BY CHIPPING HAMMERS AND SAND BLASTING AS REQUIRED.
- THE ACHIEVED SURFACE SHALL HAVE A CONCRETE SURFACE PROFILE OF 6-10 AS PER GUIDELINES OF INTERNATIONAL CONCRETE REPAIR INSTITUTE, i.e., ROUGHNESS SHALL BE IN THE RANGE OF 3-6 mm.
- THE CORNERS OF THE EXISTING COLUMN SHALL BE ROUNDED TO A RADIUS OF 15mm (⅝" INCH).
- PRIOR TO PLACEMENT OF THE RC JACKET, THE COLUMN SHALL BE WASHED BY A PRESSURE WASHER AND ITS SURFACE SHOULD BE IN MOIST DRY CONDITION.
- ALL THE HOLES DRILLED FOR INSTALLATION OF THE ANCHORS SHALL BE CLEANED BY PRESSURIZED AIR AND WIRE BRUSH PRIOR TO PLACEMENT OF THE ANCHORING ADHESIVE.
- THE ADHESIVE USED FOR ANCHORING THE ANCHORS SHALL BE SIKA ANCHOR FIX-2 (OR AN APPROVED EQUIVALENT)
- THE CONCRETE USED FOR RC JACKETING SHALL HAVE MINIMUM 28 DAYS CYLINDRICAL COMPRESSIVE STRENGTH OF 4000 psi.
- THE MAXIMUM AGGREGATE SIZE OF THE COARSE AGGREGATE TO BE USED IN THE CONCRETE OF THE JACKET SHALL NOT BE MORE THAN ½ INCH (12.5 mm).
- SIKA VISCOCRETE-20 HE (OR APPROVED EQUIVALENT) SHALL BE USED TO ACHIEVE A FOLLOWING SELF CONSOLIDATING CONCRETE WITH WATER CEMENT RATIO NOT EXCEEDING 0.35.
- THE SLUMP FLOW DIAMETER OF THE SELF-CONSOLIDATING CONCRETE SHALL BE IN THE RANGE OF 550mm TO 700mm.
- THE RC JACKET SHALL BE PLACED IN THREE LIFTS AS DESCRIBED BELOW:
  - 1st LIFT / POUR APPROXIMATELY UP TO THE MID HEIGHT OF THE COLUMN.
  - 2nd LIFT / POUR FROM TOP OF THE 1st LIFT UP TO THE TOP OF THE COLUMN, LEAVING THE TOP 2ft. UN CAST.
  - THE 3rd AND THE TOP LIFT OF THE RC JACKET SHALL BE CAST USING SIKA MONOTOP-612 (OR AN APPROVED EQUIVALENT)
- THE POURED SELF CONSOLIDATING CONCRETING SHALL BE RODED AND VIBRATOR SHALL BE APPLIED EXTERNALLY TO FORMWORK TO ASSURE PROPER CONSOLIDATION OF CONCRETE AND AVOIDING HONEYCOMBING.
- THE COLUMN SHALL BE RESTORED TO ITS ORIGINAL APPEARANCE BY APPLYING FINISHES EQUAL OR BETTER THAN THE ORIGINAL FINISHES REMOVED.

CLIENT:	PROJECT TITLE:	NOTES:	DRAWING TITLE:	DRAWING NO:
STATE BANK OF PAKISTAN PUL MOAJ DARYA, LMQ ROAD, MULTAN	DETAILED INVESTIGATION OF CRACKS IN THE ANNEX C BUILDING OF STATE BANK & PROVISION OF REMEDIAL MEASURES		**EXISTING COLUMNS** **RC JACKETING STRENGTHENING SECTIONS** **SHEET 1 OF 4**	SBP / RP / 006 DATE: Feb, 2026 SCALE: 1" = 1'-0"

e-Pak Acquisition and Disposal System (EPADS) generated document | © 2026

NOTES:

1. ALL DIMENSIONS AND ELEVATIONS ARE IN FEET-INCHES FORMAT UNLESS NOTED OTHERWISE.
2. PLANS IDENTIFY STRUCTURAL MEMBERS (BEAMS, COLUMNS) WHICH REQUIRE EITHER STRENGTHENING BY RC JACKET OR BY FRP WRAP.
3. FOR GENERAL & STRUCTURAL REPAIR & STRENGTHENING WORKS (JACKETING & FRP) NOTES SEE DWG. NO. SBP-GN-001 & 002.

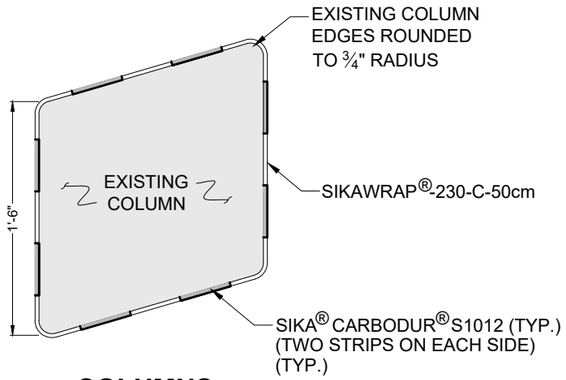

COLUMNS
(18"x18")
C-RF-7

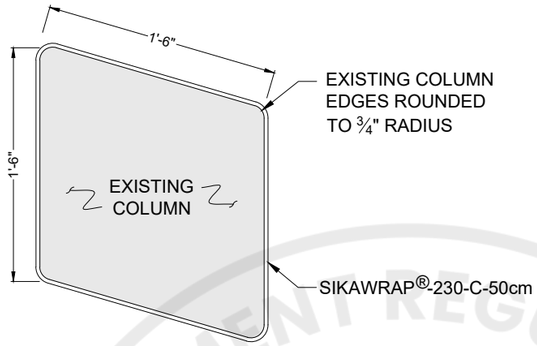

COLUMNS
(18"x18")
C-2F-1

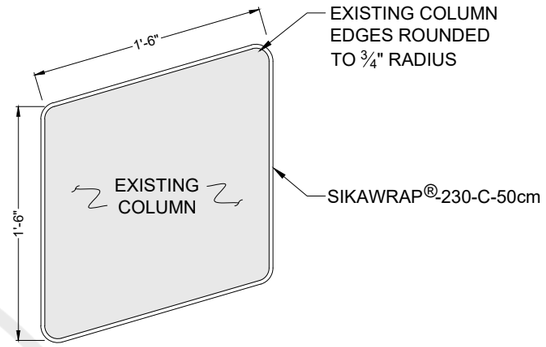

COLUMNS
(18"x18")
C-2F-2, C-2F-3, C-RF-7

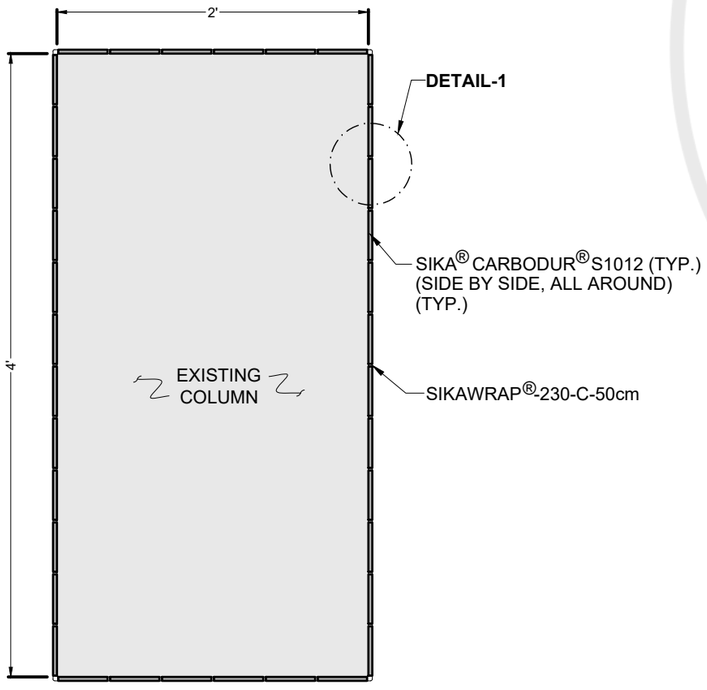

COLUMNS
(24"x36")
C-RF-1, C-RF-2, C-RF-3, C-RF-4

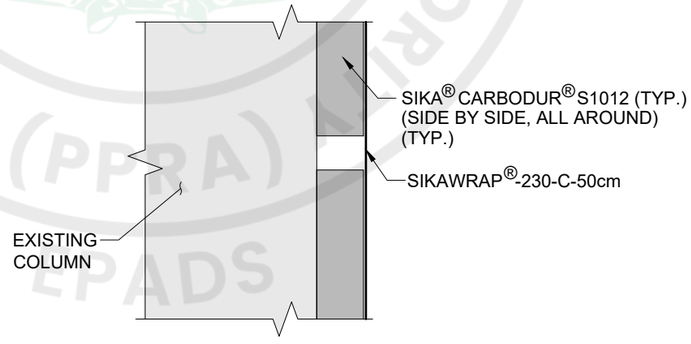

DETAIL-1
(NTS)

CLIENT:	PROJECT TITLE:	NOTES:	DRAWING TITLE:	DRAWING NO:
STATE BANK OF PAKISTAN PUL MOAJ DARYA, LMQ ROAD, MULTAN	DETAILED INVESTIGATION OF CRACKS IN THE ANNEX C BUILDING OF STATE BANK & PROVISION OF REMEDIAL MEASURES		**EXISTING COLUMNS** FRP STRENGTHENING SHEET 2 OF 4	SBP / RP / 007 DATE: Feb, 2026 SCALE: 1" = 1'-0"

e-Pak Acquisition and Disposal System (EPADS) generated document | © 2026

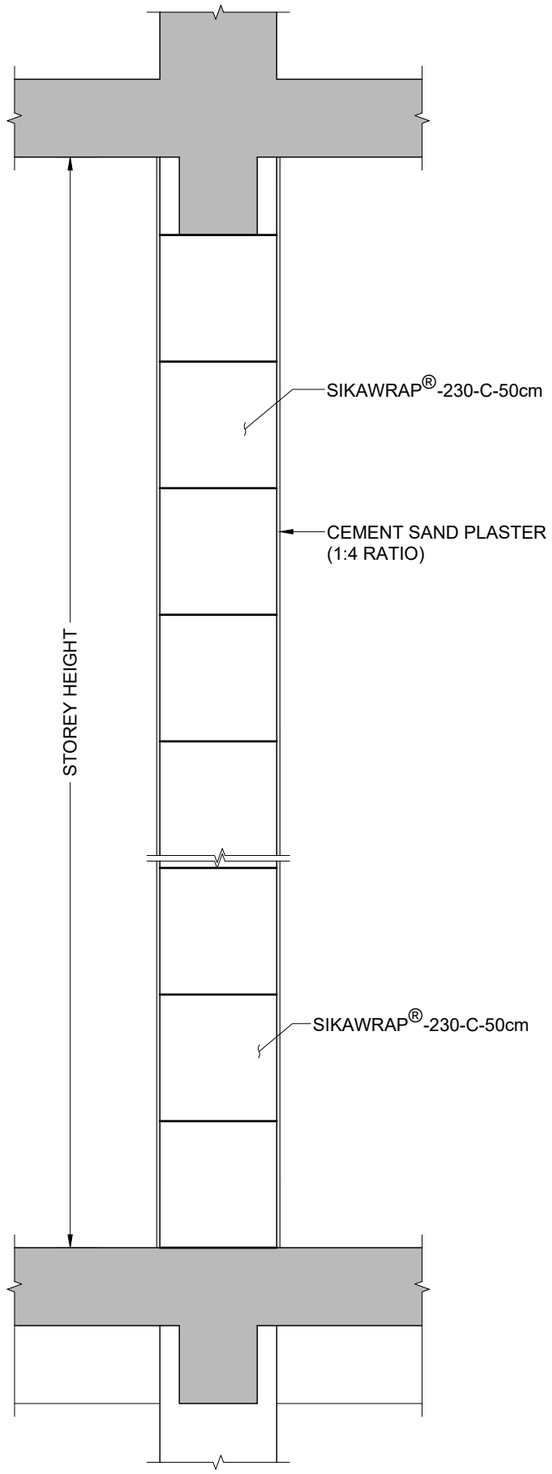

TYPICAL COLUMN ELEVATION
(STRENGTHENING BY FRP WRAPPING ONLY)
FOR COLUMNS C-2F-1, C-2F-2, C-2F-3, C-RF-7

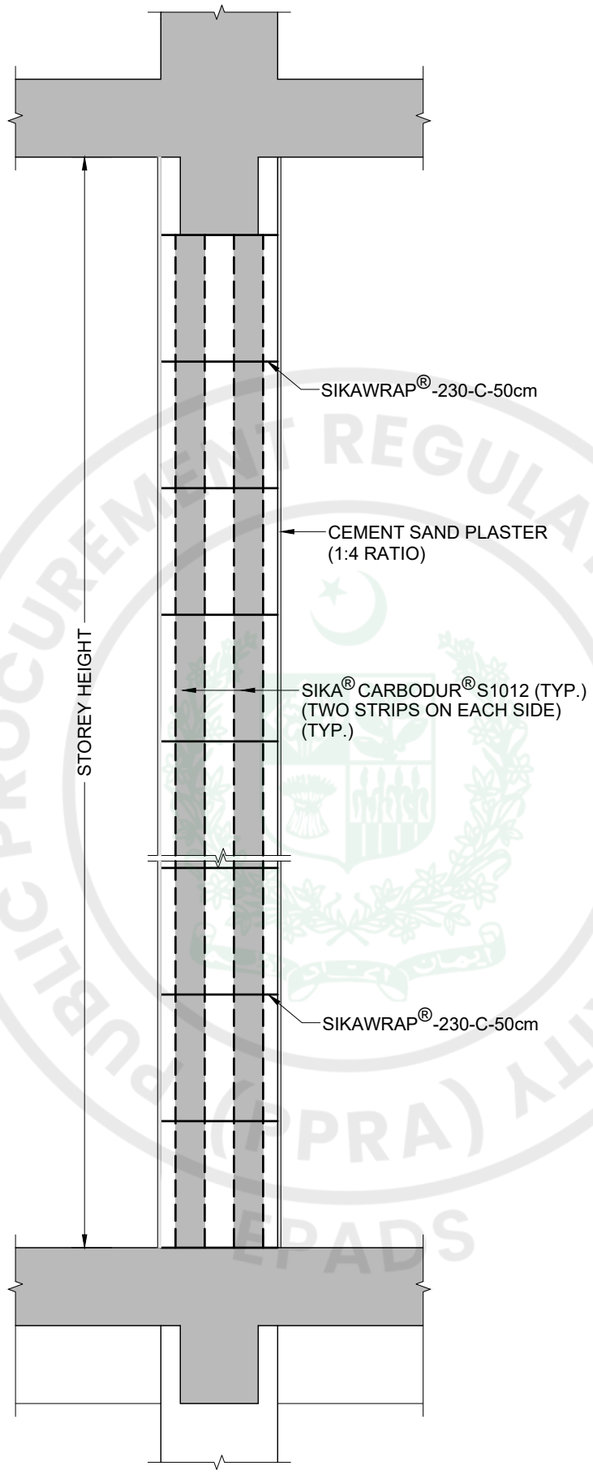

TYPICAL COLUMN ELEVATION
(STRENGTHENING BY LONGITUDINAL FRP STRIP & FRP WRAPPING)
C-RF-7

NOTES:

1. ALL DIMENSIONS AND ELEVATIONS ARE IN FEET-INCHES FORMAT UNLESS NOTED OTHERWISE.
2. PLANS IDENTIFY STRUCTURAL MEMBERS (BEAMS, COLUMNS) WHICH REQUIRE EITHER STRENGTHENING BY RC JACKET OR BY FRP WRAP.
3. FOR GENERAL & STRUCTURAL REPAIR & STRENGTHENING WORKS (JACKETING & FRP) NOTES SEE DWG. NO. SBP-GN-001 & 002.

CLIENT:	PROJECT TITLE:	NOTES:	DRAWING TITLE:	DRAWING NO:
STATE BANK OF PAKISTAN PUL MOAJ DARYA, LMQ ROAD, MULTAN	DETAILED INVESTIGATION OF CRACKS IN THE ANNEX C BUILDING OF STATE BANK & PROVISION OF REMEDIAL MEASURES		**EXISTING COLUMNS** **FRP STRENGTHENING** **SHEET 3 OF 4**	SBP / RP / 008
			DATE: Feb, 2026	SCALE: 1" = 1'-0"

e-Pak Acquisition and Disposal System (EPADS) generated document | © 2026

NOTES:

1. ALL DIMENSIONS AND ELEVATIONS ARE IN FEET-INCHES FORMAT UNLESS NOTED OTHERWISE.
2. PLANS IDENTIFY STRUCTURAL MEMBERS (BEAMS, COLUMNS) WHICH REQUIRE EITHER STRENGTHENING BY RC JACKET OR BY FRP WRAP.
3. FOR GENERAL & STRUCTURAL REPAIR & STRENGTHENING WORKS (JACKETING & FRP) NOTES SEE DWG. NO. SBP-GN-001 & 002.

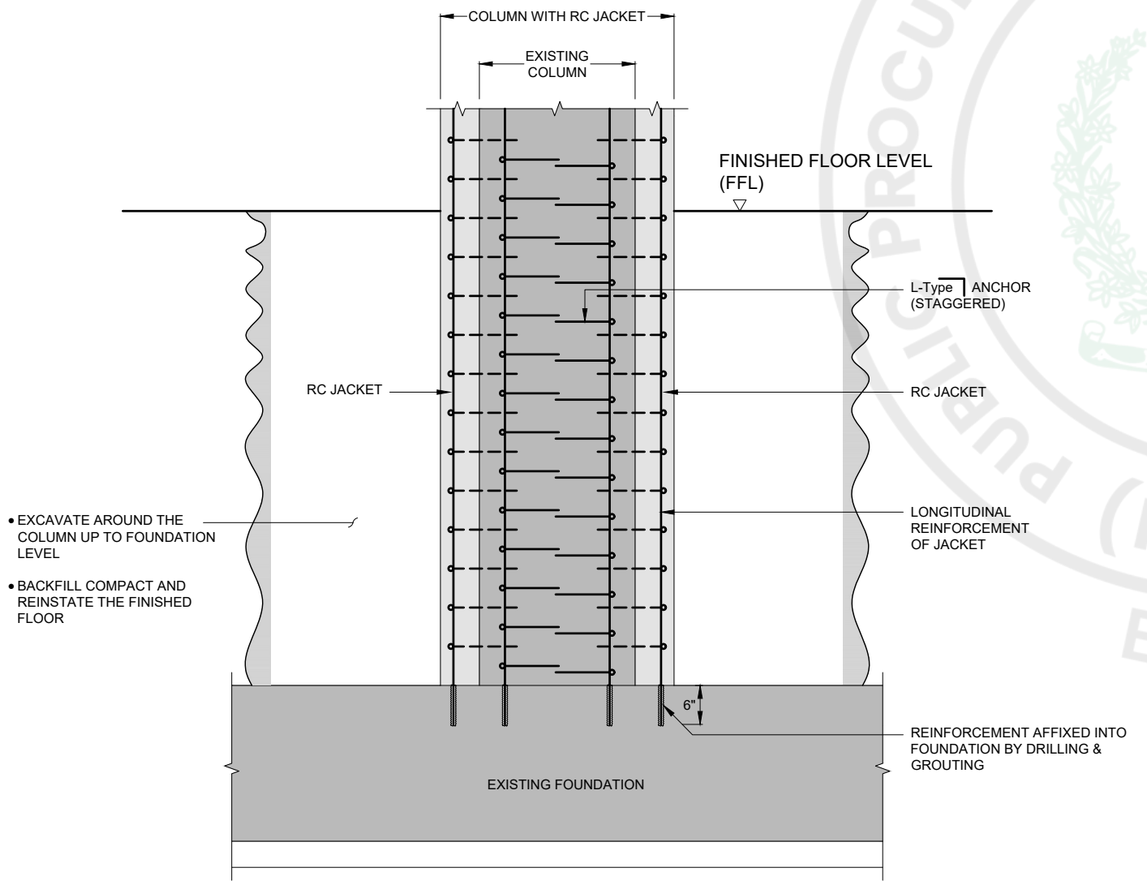

TYPICAL EXISTING FOUNDATION

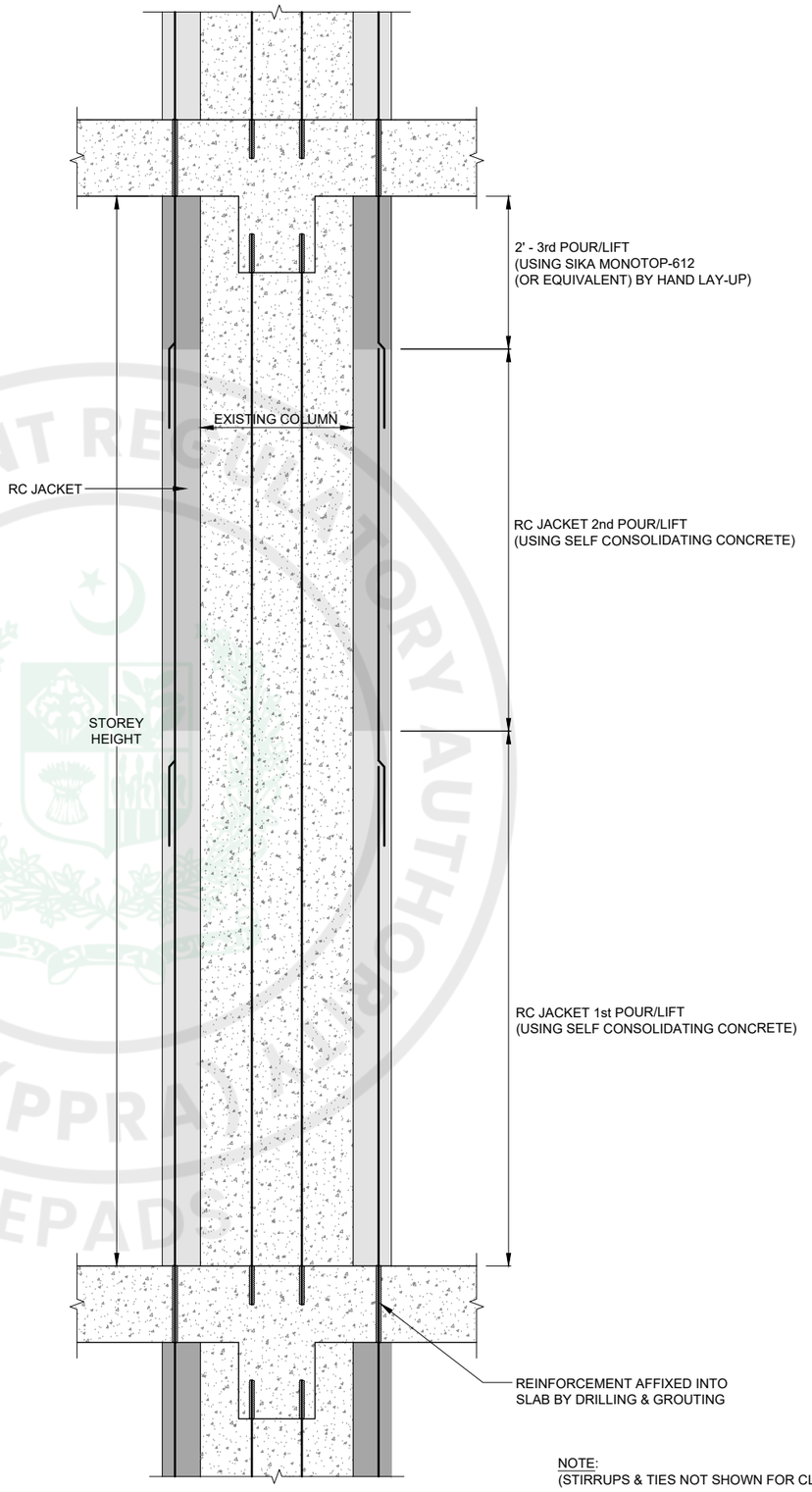

NOTE:
(STIRRUPS & TIES NOT SHOWN FOR CLARITY)

TYPICAL RC JACKETED COLUMN

CLIENT:	PROJECT TITLE:	NOTES:	DRAWING TITLE:	DRAWING NO:
STATE BANK OF PAKISTAN PUL MOAJ DARYA, LMQ ROAD, MULTAN	DETAILED INVESTIGATION OF CRACKS IN THE ANNEX C BUILDING OF STATE BANK & PROVISION OF REMEDIAL MEASURES		**EXISTING FOUNDATION & COLUMNS** **RC JACKETING STRENGTHENING** **SHEET 4 OF 4**	SBP / RP / 009
			DATE: Feb, 2026	SCALE: 1/2" = 1'-0"

e-Pak Acquisition and Disposal System (EPADS) generated document | © 2026

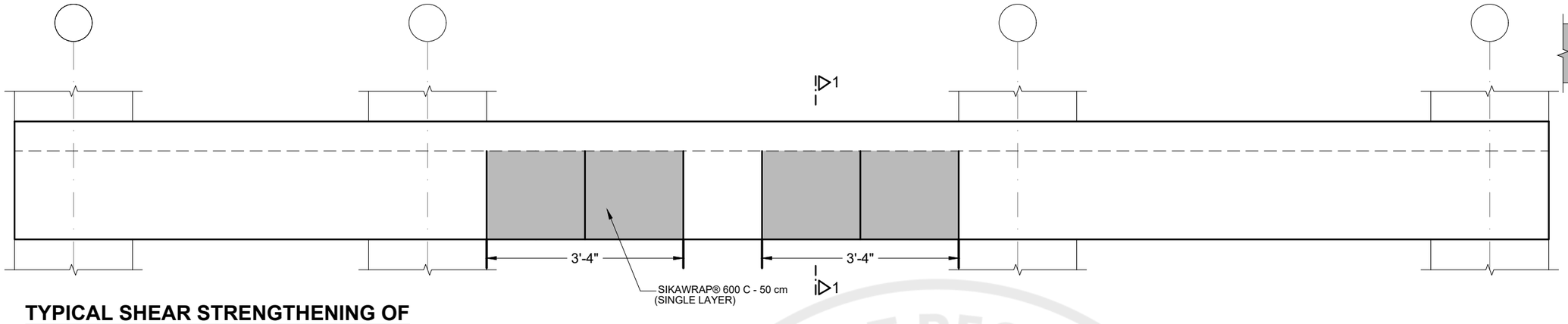

TYPICAL SHEAR STRENGTHENING OF 8"x24" BEAMS

LIST (GB-3, GB-4, 1FB-5, 2FB-18, 2FB-19 2FB-20, 2FB-24, RB-14)

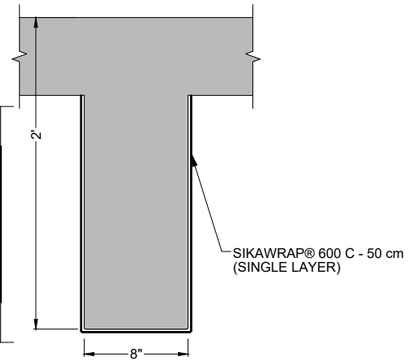

SECTION 1-1 (8"x24")

SCALE: 1"=1'-0"

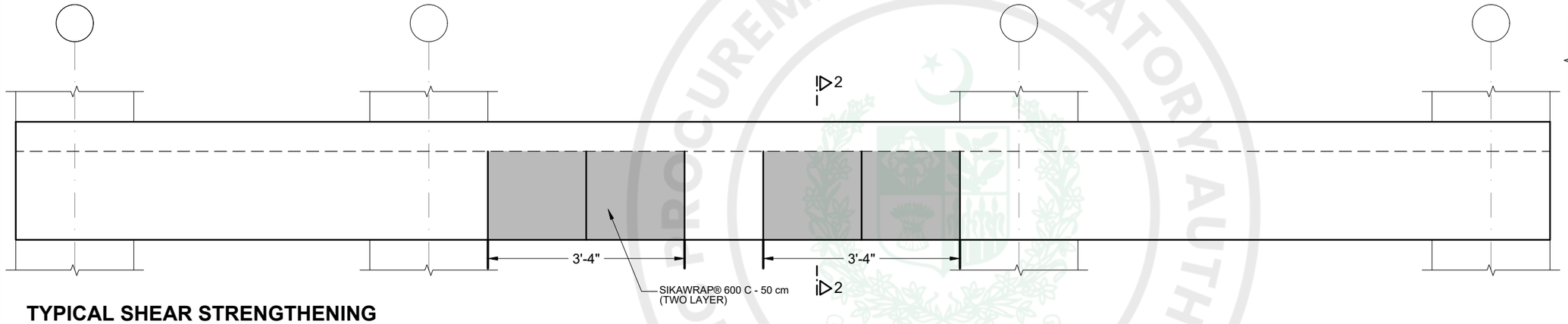

TYPICAL SHEAR STRENGTHENING OF 12"x24" BEAMS

LIST (GB-1, 1FB-2, 1FB-3, 2FB-11, 2FB-22, 2FB-23)

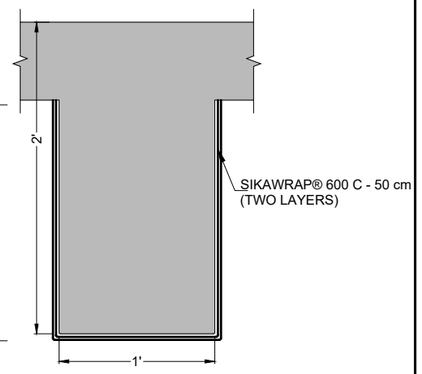

SECTION 2-2 (12"x24")

SCALE: 1"=1'-0"

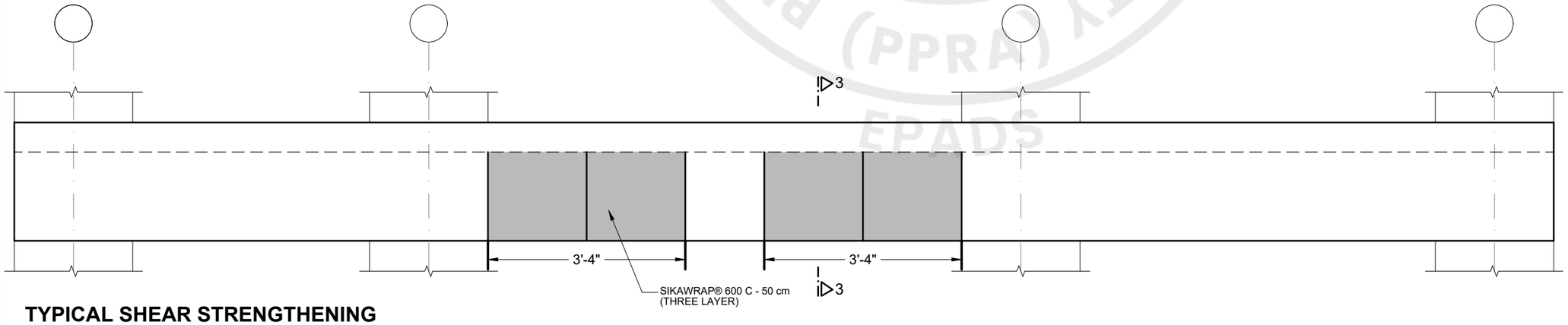

TYPICAL SHEAR STRENGTHENING OF 8"x30" BEAMS

LIST (1FB-1)

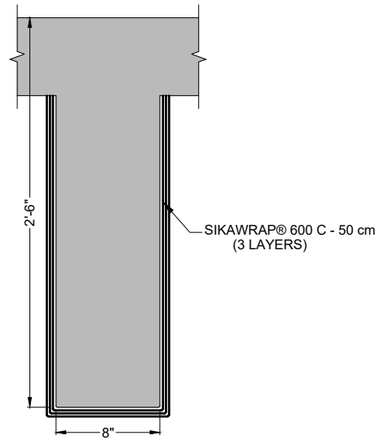

SECTION 3-3 (8"x24")

SCALE: 1"=1'-0"

CLIENT:	PROJECT TITLE:	NOTES:	DRAWING TITLE:	DRAWING NO:
STATE BANK OF PAKISTAN PUL MOAJ DARYA, LMQ ROAD, MULTAN	DETAILED INVESTIGATION OF CRACKS IN THE ANNEX C BUILDING OF STATE BANK & PROVISION OF REMEDIAL MEASURES	1. ALL DIMENSIONS AND ELEVATIONS ARE IN FEET-INCHES FORMAT UNLESS NOTED OTHERWISE. 2. PLANS IDENTIFY STRUCTURAL MEMBERS (BEAMS, COLUMNS) WHICH REQUIRE EITHER STRENGTHENING BY RC JACKET OR BY FRP WRAP. 3. FOR GENERAL & STRUCTURAL REPAIR & STRENGTHENING WORKS (JACKETING & FRP) NOTES SEE DWG. NO. SBP-GN-001.	**TYPICAL BEAMS STRENGTHENING ELEVATION & SECTIONS** SHEET 1 OF 3	SBP / RP / 010 **DATE:** Feb, 2026 **SCALE:** ½" & 1" = 1'-0"

e-Pak Acquisition and Disposal System (EPADS) generated document | © 2026

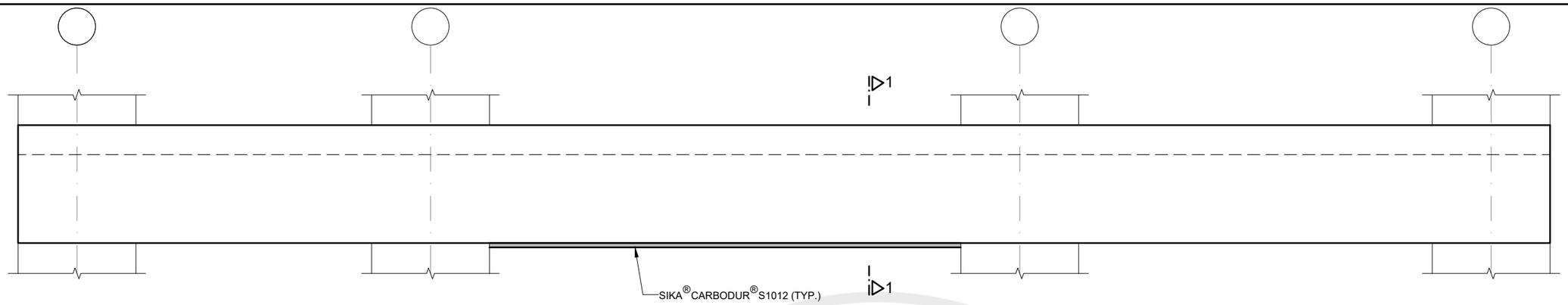

TYPICAL FLEXURAL STRENGTHENING OF 8"x24" BEAMS

LIST (GB-2, 1FB-6, 2FB-16, 2FB-17, 2FB-19, 2FB-21)

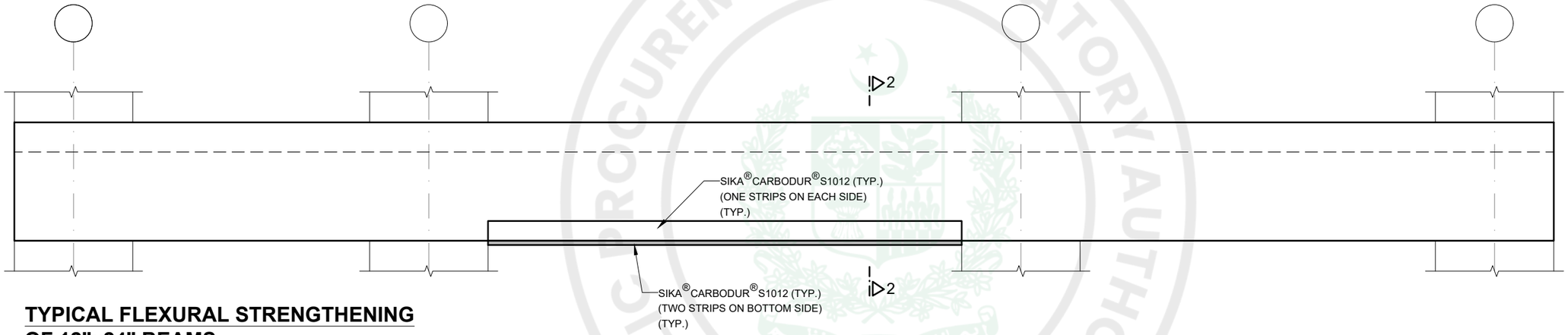

TYPICAL FLEXURAL STRENGTHENING OF 12"x24" BEAMS

LIST(1FB-3, 2FB-1, 2FB-2, 2FB-4, 2FB-5, 2FB-6, 2FB-7, 2FB-12, RB-1, RB-2, RB-3, RB-4, RB-5)

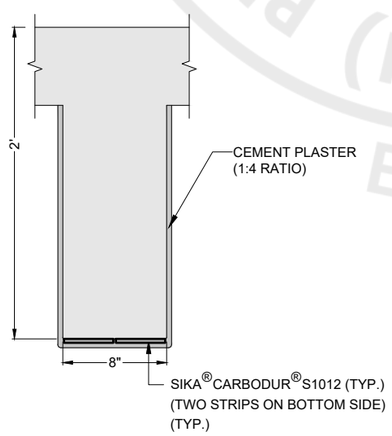

SECTION 1-1 (8"x24")

SCALE: 1"=1'-0"

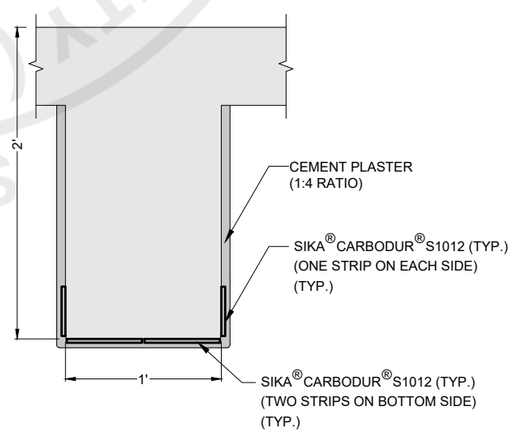

SECTION 2-2 (12"x24")

SCALE: 1"=1'-0"

CLIENT:	PROJECT TITLE:	NOTES:	DRAWING TITLE:	DRAWING NO:
STATE BANK OF PAKISTAN PUL MOAJ DARYA, LMQ ROAD, MULTAN	**DETAILED INVESTIGATION OF CRACKS IN THE ANNEX C BUILDING OF STATE BANK & PROVISION OF REMEDIAL MEASURES**	1. ALL DIMENSIONS AND ELEVATIONS ARE IN FEET-INCHES FORMAT UNLESS NOTED OTHERWISE. 2. PLANS IDENTIFY STRUCTURAL MEMBERS (BEAMS, COLUMNS) WHICH REQUIRE EITHER STRENGTHENING BY RC JACKET OR BY FRP WRAP. 3. FOR GENERAL & STRUCTURAL REPAIR & STRENGTHENING WORKS (JACKETING & FRP) NOTES SEE DWG. NO. SBP-GN-001.	**TYPICAL BEAMS STRENGTHENING ELEVATION & SECTIONS SHEET 2 OF 3**	SBP / RP / 011 **DATE:** Feb, 2026 **SCALE:** ¼" = 1'-0"

e-Pak Acquisition and Disposal System (EPADS) generated document | © 2026

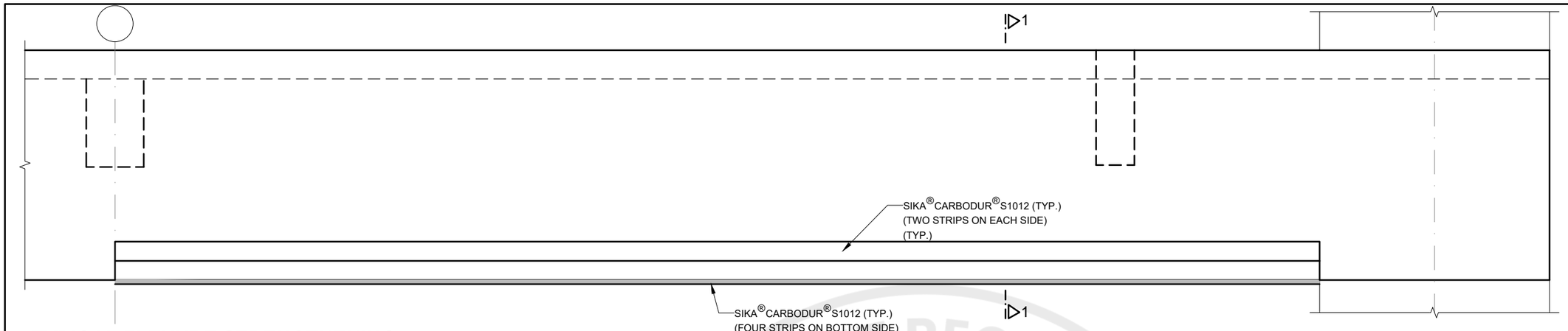

TYPICAL FLEXURE STRENGTHENING OF 18"x48" BEAMS

LIST (RB-6, RB-7, RB-8, RB-9, RB-10, RB-11, RB-12, RB-13)

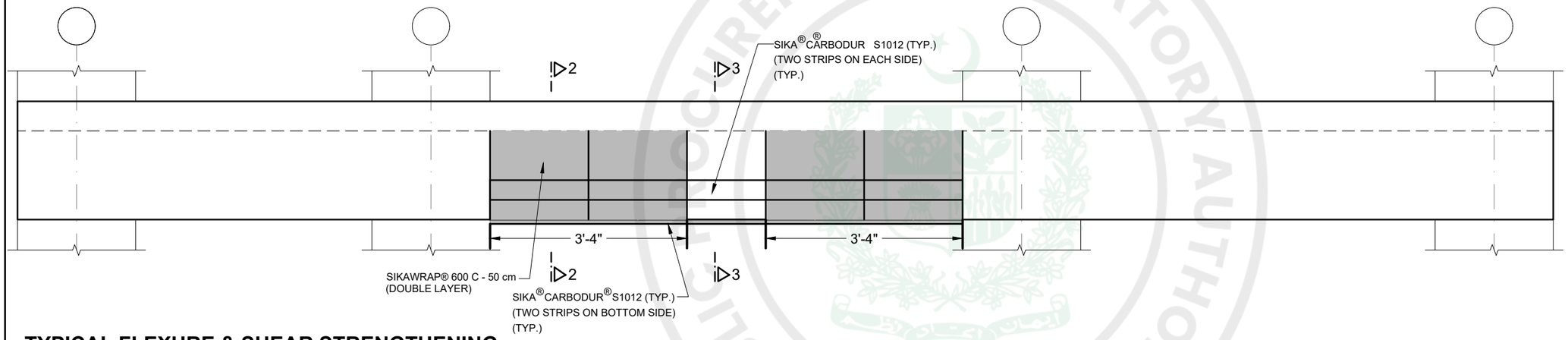

TYPICAL FLEXURE & SHEAR STRENGTHENING OF 12"x24" BEAMS

LIST (2FB-8, 2FB-9, 2FB-10, 2FB-13, 2FB-14, 2FB-15)

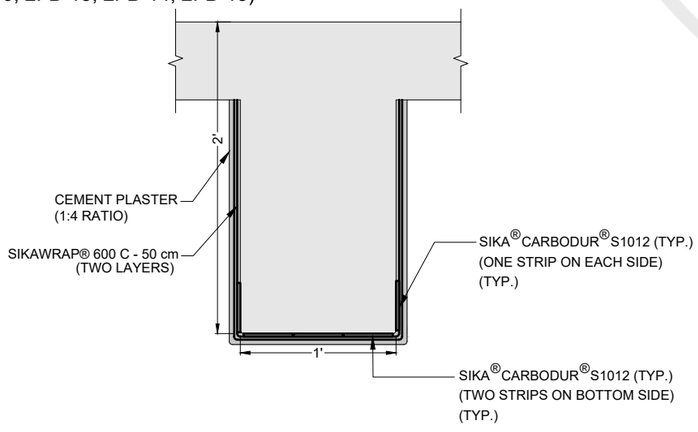

SECTION 2-2 (12"x24")

SCALE: 1"=1'-0"

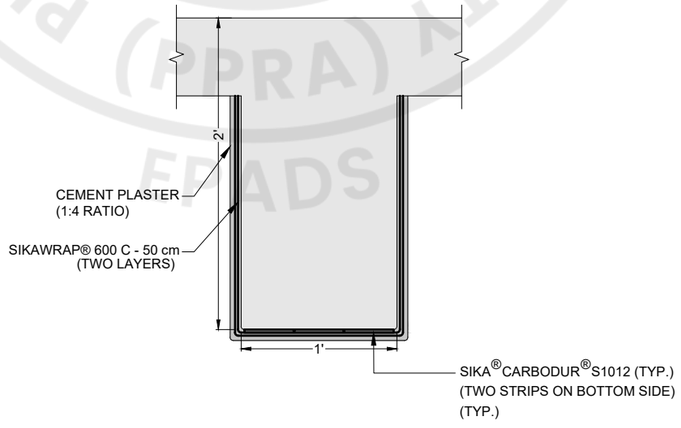

SECTION 3-3 (12"x24")

SCALE: 1"=1'-0"

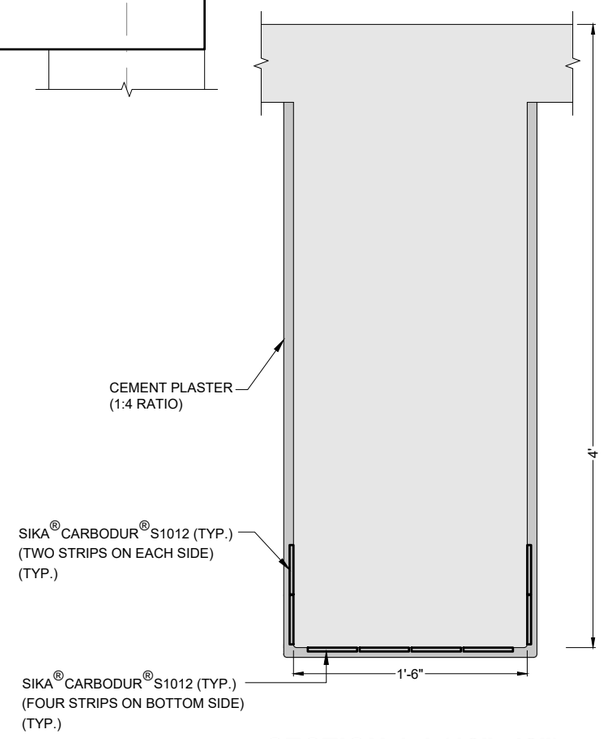

SECTION 1-1 (18"x48")

SCALE: 1"=1'-0"

CLIENT:	PROJECT TITLE:	NOTES:	DRAWING TITLE:	DRAWING NO:
STATE BANK OF PAKISTAN PUL MOAJ DARYA, LMQ ROAD, MULTAN	**DETAILED INVESTIGATION OF CRACKS IN THE ANNEX C BUILDING OF STATE BANK & PROVISION OF REMEDIAL MEASURES**	1. ALL DIMENSIONS AND ELEVATIONS ARE IN FEET-INCHES FORMAT UNLESS NOTED OTHERWISE. 2. PLANS IDENTIFY STRUCTURAL MEMBERS (BEAMS, COLUMNS) WHICH REQUIRE EITHER STRENGTHENING BY RC JACKET OR BY FRP WRAP. 3. FOR GENERAL & STRUCTURAL REPAIR & STRENGTHENING WORKS (JACKETING & FRP) NOTES SEE DWG. NO. SBP-GN-001.	**TYPICAL BEAMS STRENGTHENING ELEVATION & SECTIONS** **SHEET 3 OF 3**	SBP / RP / 012 **DATE:** Feb, 2026 **SCALE:** ¼" & 1" = 1'-0"

e-Pak Acquisition and Disposal System (EPADS) generated document | © 2026

NOTES:

1. ALL DIMENSIONS AND ELEVATIONS ARE IN FEET-INCHES FORMAT UNLESS NOTED OTHERWISE.
2. PLANS IDENTIFY STRUCTURAL MEMBERS (BEAMS, COLUMNS) WHICH REQUIRE EITHER STRENGTHENING BY RC JACKET OR BY FRP WRAP.
3. FOR GENERAL & STRUCTURAL REPAIR & STRENGTHENING WORKS (JACKETING & FRP) NOTES SEE DWG. NO. SBP-GN-001 & 002.

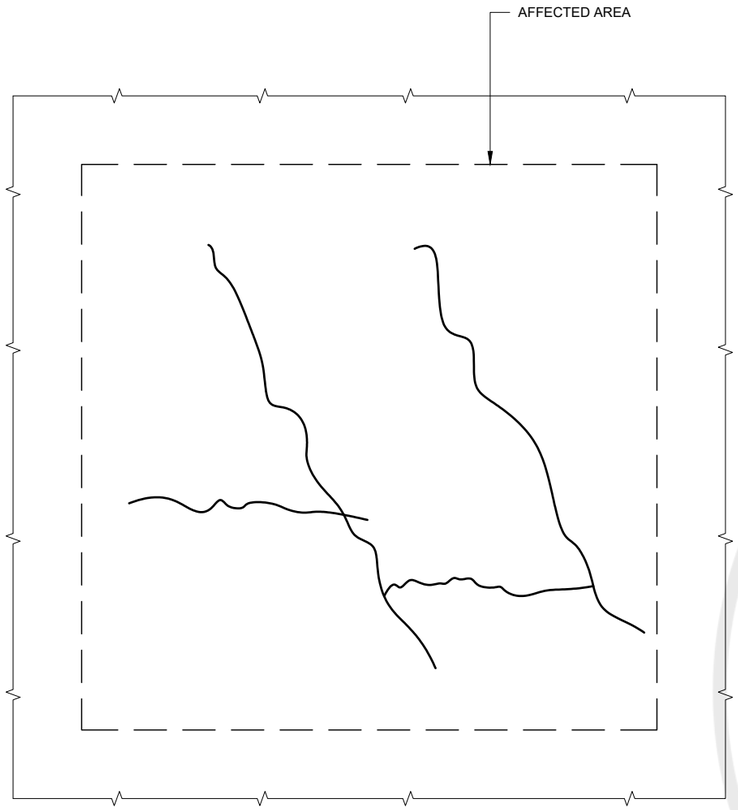

TYPICAL CRACKS IN MASONRY WALL PANEL
(NTS)

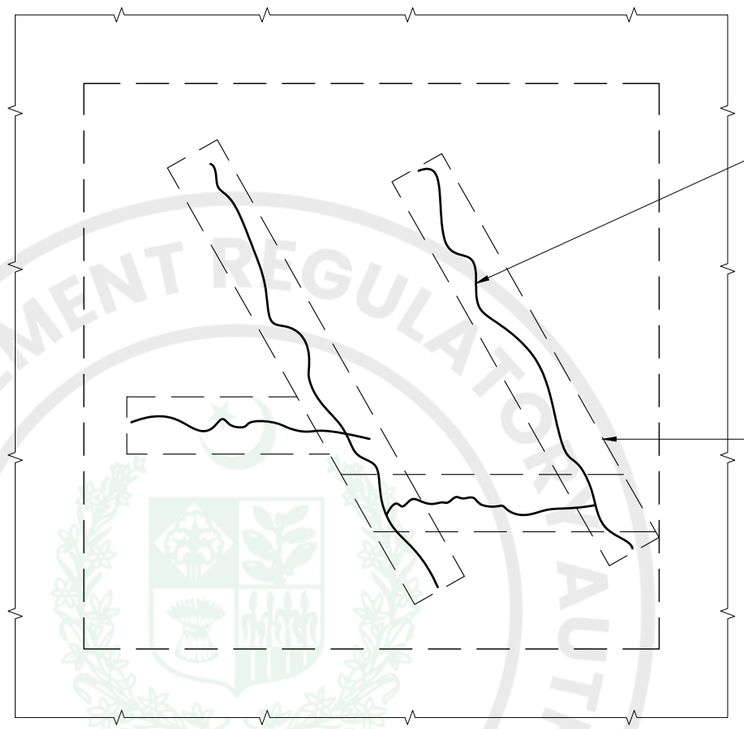

TREATMENT OF MASONRY WALL PANELS & STRUCTURAL MEMBERS WITH MINOR CRACKING
(CRACK WIDTH < 1.0 mm)
(NTS)

PUBLIC PROCUREMENT REGULATORY AUTHORITY (PPRA) EPADS

CLIENT:	PROJECT TITLE:	NOTES:	DRAWING TITLE:	DRAWING NO:
STATE BANK OF PAKISTAN PUL MOAJ DARYA, LMQ ROAD, MULTAN	DETAILED INVESTIGATION OF CRACKS IN THE ANNEX C BUILDING OF STATE BANK & PROVISION OF REMEDIAL MEASURES		TYPICAL CRACKS IN WALL & REPAIRING SHEET 1 OF 3	SBP / RP / 013 DATE: Feb, 2026 SCALE: 1" = 1'-0"

e-Pak Acquisition and Disposal System (EPADS) generated document | © 2026

NOTES:

1. ALL DIMENSIONS AND ELEVATIONS ARE IN FEET-INCHES FORMAT UNLESS NOTED OTHERWISE.
2. PLANS IDENTIFY STRUCTURAL MEMBERS (BEAMS, COLUMNS) WHICH REQUIRE EITHER STRENGTHENING BY RC JACKET OR BY FRP WRAP.
3. FOR GENERAL & STRUCTURAL REPAIR & STRENGTHENING WORKS (JACKETING & FRP) NOTES SEE DWG. NO. SBP-GN-001 & 002.

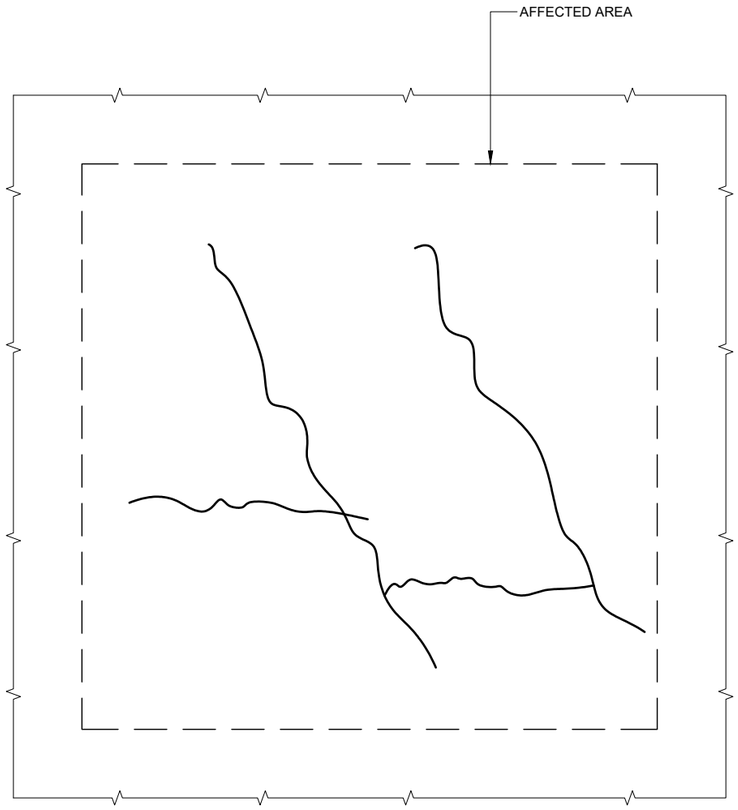

TYPICAL CRACKS IN MASONRY WALL PENAL
(NTS)

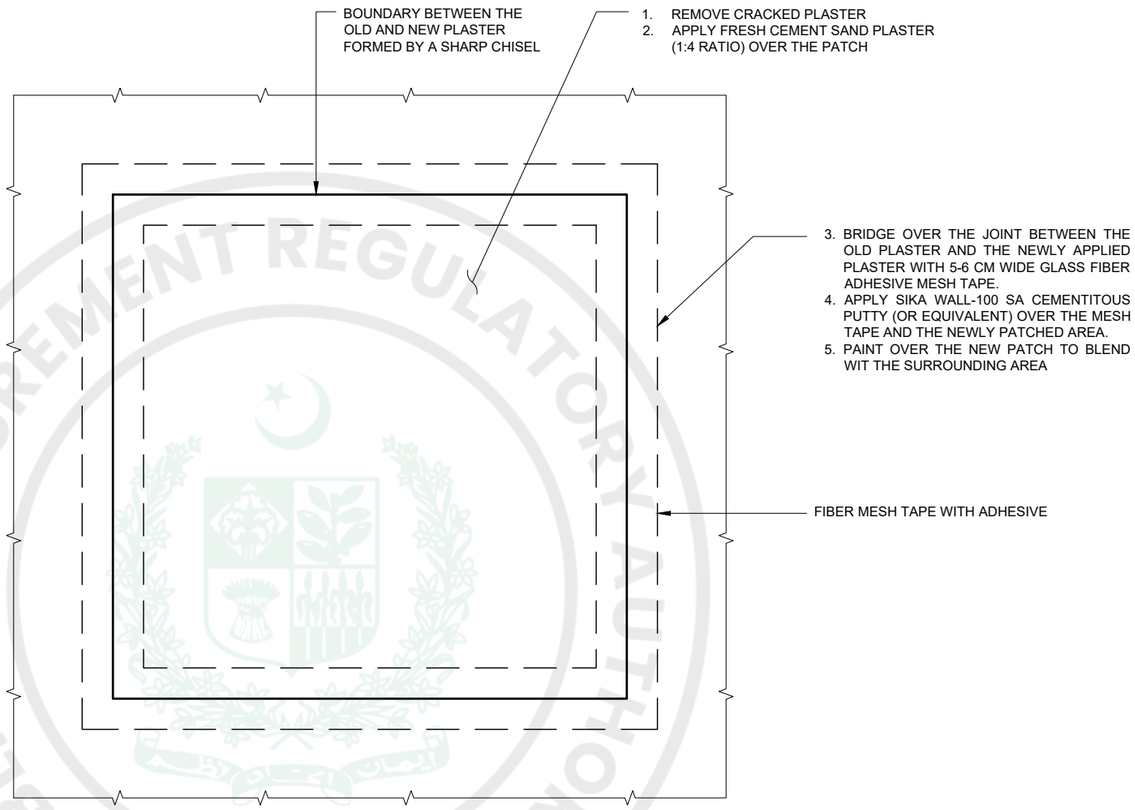

TREATMENT OF MASONRY WALL PANELS & STRUCTURAL MEMBERS WITH MODERATE CRACKING (1.0mm < CRACK WIDTHS < 3 mm)
(NTS)

PUBLIC PROCUREMENT REGULATORY AUTHORITY
EPADS

CLIENT:	PROJECT TITLE:	NOTES:	DRAWING TITLE:	DRAWING NO:
STATE BANK OF PAKISTAN PUL MOAJ DARYA, LMQ ROAD, MULTAN	DETAILED INVESTIGATION OF CRACKS IN THE ANNEX C BUILDING OF STATE BANK & PROVISION OF REMEDIAL MEASURES		TREATMENT OF MASONRY WALL PANELS WITH MINOR CRACKING (1.00mm < CRACK WIDTH < 3.0 mm) SHEET 2 OF 3	SBP / RP / 014 DATE: Feb, 2026 SCALE: 1" = 1'-0"

e-Pak Acquisition and Disposal System (EPADS) generated document | © 2026

NOTES:

1. ALL DIMENSIONS AND ELEVATIONS ARE IN FEET-INCHES FORMAT UNLESS NOTED OTHERWISE.
2. PLANS IDENTIFY STRUCTURAL MEMBERS (BEAMS, COLUMNS) WHICH REQUIRE EITHER STRENGTHENING BY RC JACKET OR BY FRP WRAP.
3. FOR GENERAL & STRUCTURAL REPAIR & STRENGTHENING WORKS (JACKETING & FRP) NOTES SEE DWG. NO. SBP-GN-001 & 002.

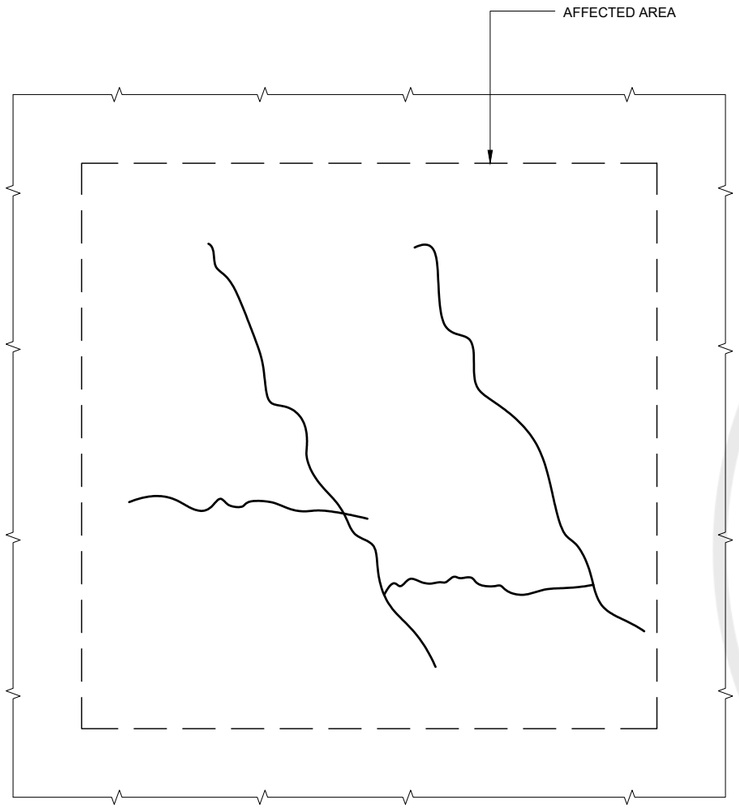

TYPICAL CRACKS IN MASONRY WALL PENAL
(NTS)

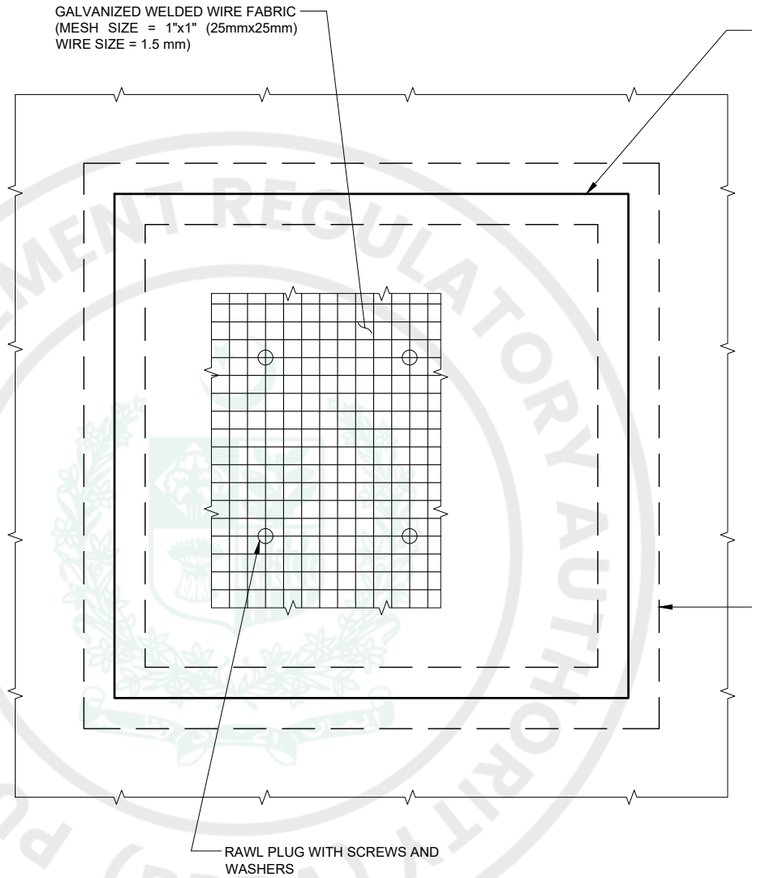

1. BOUNDARY BETWEEN THE OLD AND NEW PLASTER FORMED BY CHISEL PRIOR TO REMOVING CRACKED PLASTER.
2. REMOVE CRACKED PLASTER.
3. AFFIX GALVANIZED WELDED WIRE FABRIC TO THE EXPOSED SUB STRUCTURAL SUBSTRATE BY MEANS OF RAWL PLUGS, SCREWS AND WASTERS.
4. APPLY FRESH CEMENT SAND MORTAR PLASTER (1:4 RATIO) OVER THE PATCH.
5. BRIDGE OVER THE JOINT BETWEEN THE OLD PLASTER AND THE NEWLY APPLIED PLASTER WITH 5-6 cm WIDE FIBER GLASS ADHESIVE MESH/TAPE.
6. APPLY SIKA WALL-100SA (OR EQUIVALENT) CEMENTITIOUS PUTTY OVER THE MESH TAPE AND THE NEWLY PATCHED AREA.
7. PAINT OVER THE NEW PATCH TO BLEND WITH THE SURROUNDING AREA.

TREATMENT OF MASONRY WALL PANELS WITH LARGE SCALE CRACKING (CRACK WIDTH > 3 mm)
(NTS)

CLIENT:	PROJECT TITLE:	NOTES:	DRAWING TITLE:	DRAWING NO:
STATE BANK OF PAKISTAN PUL MOAJ DARYA, LMQ ROAD, MULTAN	DETAILED INVESTIGATION OF CRACKS IN THE ANNEX C BUILDING OF STATE BANK & PROVISION OF REMEDIAL MEASURES		TREATMENT OF MASONRY WALL PANELS WITH LARGE SCALE CRACKING (CRACK WIDTH > 3 mm) SHEET 3 OF 3	SBP / RP / 015
			DATE: Feb, 2026	SCALE: 1" = 1'-0"

e-Pak Acquisition and Disposal System (EPADS) generated document | © 2026

UNDERTAKING

Title: _____

Bidder: _____

1. I/We hereby confirm and declare that I/We has/have not been declared in-eligible or debarred, blacklisted/sanctioned by any Federal or Provincial Government Department, National Counter Terrorism Authority (NACTA), Agency, Organization or Autonomous Body anywhere in Pakistan or fraudulent practices, or no failure to perform with SBP.

2. I/We, understand and agree unconditionally that in case I/We, fail to abide by the above undertaking or any of terms of the Contract, the Client/ SBP BSC shall be at liberty to terminate the Contract without prejudice to any other rights / remedy available in the Contract.

Bidder Sign & Stamp

PUBLIC PROCUREMENT REGULATORY AUTHORITY (PPRA) EPADS

S-2 FORM
Supplier Bank Account Details

	STATE BANK OF PAKISTAN **BANKING SERVICES CORPORATION** **Supplier Bank Account (IBAN) Details Form**	S-2

1. For Office use:

***Office/Deptt**				***Supplier No.**			**WHT Rate**
Supplier	**New**		**Update**	***Liability A/C**			
***Supplier Type**				***Prepayment A/C**			

2. Supplier Information

***Supplier Name**			
***Supplier NTN**		**CNIC No.**	
Supplier Address			
		Supplier City	
Contact No.		**Mobile**	
E-mail Address		**Fax No.**	

3. Bank Account Information

***Bank Name**					
***IBAN (24 Characters)**					***Supplier Stamp & Signature**
***Branch Type**	**Islamic**		**Commercial**		
***Title of Account**					

(For Office use only)

Forwarded By	**Verified By**	**Entered By (Supplier Mgt User)**
(Procurement Function)		
	Date	

Field marked with * are mandatory.
Information without complete Bank Account Details (IBAN) & NTN/ CNIC will not be accepted.
Any changes in Supplier's particulars should be conveyed immediately to SBP BSC. SBP BSC will not be responsible for credit into wrong account of supplier due to change in bank account details not conveyed to SBP BSC or delay in settlement of supplier's claims.

Past Experience / Contracts

Contracts over *[insert amount]* during the last three years:				
Procuring Agency	Value	Year	Goods/Services Supplied	Country of Destination

PUBLIC PROCUREMENT REGULATORY AUTHORITY (PPRA) EPADS