Standard Bidding Document

ESTABLISHMENT OF CDA ONE WINDOW CELL AT G-7, ISLAMABAD.
(Works)

National

Single Stage-One Envelope

November 24, 2026

Sector Development (Capital Development Authority),Deputy Director
Room No 29, CDA Main Secretariat, Block No-III, First Floor, Sector G-7/4, Islamabad.
Phone: +92-333-422-8511, Email: ejazulhassan91@gmail.com

Table of Contents

REQUEST FOR BIDS 1

Instructions to Bidders 3

Bid Data Sheet 31

Eligibility Criteria 35

Evaluation Criteria 36

Jobs/Lots 36

Work Specifications and Market Rates 37

Scope of Work 97

Brief Description 97

Price Schedule 98

General Conditions of Contract 100

Special Conditions of Contract 102

Bid Securing Declaration 120

Contract Form 122

DAAB Agreement 125

Retention Money Security Demand Guarantee 1

Integrity Pact 130

Performance Guarantee Form 132

Annexure 135

Abstract of Cost 136

Architectural Working Drawings 136

Structure Drawings 136

Procurement Forms 137

Additional Forms and Documents 140

REQUEST FOR BIDS

PROCUREMENT OF CIVIL WORKS

1. The **Sector Development (Capital Development Authority)** has reserved Funds for the procurement planned for FY **2026-27**. The **Sector Development (Capital Development Authority)** intends to apply part of the proceeds of this Fund to cover eligible payments under the contract for the "**ESTABLISHMENT OF CDA ONE WINDOW CELL AT G-7, ISLAMABAD.**" with the reference of **"P211713"**

2. The **Sector Development (Capital Development Authority)** invites electronic Bids from eligible Bidders for procurement of Works **(ESTABLISHMENT OF CDA ONE WINDOW CELL AT G-7, ISLAMABAD.)** described in the bidding documents on **EPADS v2.0**.

3. **Single Stage-One Envelope** will be used by adopting **Least Cost Based Selection (LCBS)** Technique for the subject procurement, in line with the Public Procurement Rules, 2026 and any Regulations, Regulatory Guides, Procurement Guidelines or Instructions issued by the Authority from time to time.

4. All Bids must be accompanied by a Bid Security amounting described in Bid Security Section in Bidding Document in the form of **Pay Order, Call at Deposit**. Or all bids must be accompanied by bid securing declaration in the format specified in the Bidding documents

5. E-Bidding documents, containing detailed terms & conditions, specifications and requirements etc. are available on **e-Pak Acquisition and Disposal System (EPADS)** at **https://epads.gov.pk/opportunities/federal/procurements/211713** for all the interested bidders registered on **EPADS v2.0**. Bidders are required to get themselves registered on **EPADS v2.0** to participate in Bidding process.

6. The e-bids, prepared in accordance with the instructions in the e-Bidding documents, must be submitted through **EPADS v2.0** on or before **Friday, November 27, 2026 11:00 AM**. E-bids will be opened by using **EPADS v2.0** on the same day at **Friday, November 27, 2026 11:30 AM**. Manual

submission of Bids shall not be entertained. Those vendor who have not yet registered on the new version of **EPADS v2.0**, may register themselves on **https://vendors.epads.gov.pk/**. A tutorial to explain the registration process is available at **https://www.youtube.com/watch?v=MNW6T38v7tc.**

In terms of Rules 65 of Public Procurement Rules, 2026 Grievance Redressal Committee (GRC) is notified for the subject procurement and notification copy is available on the procuring agency's website and on Authority's website at (**www.ppra.gov.pk**).

Sector Development (Capital Development Authority), Deputy Director
Room No 29, CDA Main Secretariat, Block No-III, First Floor, Sector G-7/4, Islamabad.
+92-333-422-8511
ejazulhassan91@gmail.com

Instructions to Bidders

A. INTRODUCTION

1. **Scope of Bid**

1.1. The Procuring agency/Employer (PA), as indicated in the **Bid Data Sheet** (BDS) invites Bids for the execution of Works as specified in the BDS and **Section VI- Works Requirements**. The name, identification, and number of lots (contracts) of this National/ International Competitive Bidding process are specified in the BDS.

2. **Source of Funds**

2.1. Source of funds as referred in Clause 2 of Bid Data Sheet.

3. **Eligible Bidders**

3.1. A bidder may be natural person, company or firm or public or semi-public agency of Pakistan or any foreign country, or any combination of them with a formal existing agreement (on Judicial Papers) in the form of a joint venture or consortium. In the case of a joint venture or consortium, all members shall be jointly and severally liable for the execution of the Contract in accordance with the terms and conditions of the Contract. The joint venture or consortium shall nominate a Lead Member as nominated in the BDS, who shall have the authority to conduct all business for and on behalf of any and all the members of the joint venture or consortium during the Bidding process, and in case of award of contract, during the execution of contract. Verifiable copy of the agreement that forms a joint venture, consortium or association shall be required to be submitted as part of the Bid.

Any bid submitted by the joint venture shall indicate the part of proposed contract to be performed by each party and each party shall be evaluated (or post qualified if required) with respect to its contribution only, and the responsibilities of each party shall not be substantially altered without prior written approval of the Procuring Agency and in line with any instructions issued by the Authority.

(The limit on the number of members of JV or Consortium may be prescribed

in BDS, in accordance with the guidelines issued by the PPRA).

3.2. The invitation for bids is open to all prospective bidders subject to any provisions of incorporation or licensing by the respective national/ international incorporating agency or statutory body established for that particular trade or business. Procuring agencies shall specify the registration/licensing requirements for the foreign bidder keeping in view the requirement of that business.

3.3. A Bidder shall not have a conflict of interest. All Bidders found to have a conflict of interest shall be disqualified. A Bidders may be considered to have a conflict of interest with one or more parties in this Bidding process, if they:

3.3.1. are associated or have been associated in the past, directly or indirectly with a firm or any of its affiliates which have been engaged by the Procuring agency/Employer to provide consulting services for the preparation of design or technical specifications of the works that are the subject of the bid; or

3.3.2. have controlling shareholders in common; or

3.3.3. receive or have received any direct or indirect subsidy from any of them; or

3.3.4. have the same legal representative for purposes of this Bid; or

3.3.5. have a relationship with each other, directly or through common third parties, that puts them in a position to have access to information about or influence on the bid of another bidder, or influence the decisions of the Procuring agency/Employer regarding this Bidding process; or

3.3.6. Submit more than one bid in this bidding process.

3.4. A Bidder may be ineligible if –

3.4.1. he is declared bankrupt or, in the case of company or firm, insolvent;

3.4.2. payments in favor of the bidder is suspended in accordance with the judgment of a court of law other than a judgment declaring bankruptcy and resulting (in accordance with the national laws) in the total or partial loss of the right to administer and dispose of its property;

3.4.3. the bidder is convicted, by a final judgment of a Court of Law or relevant Professional Statuary Body, of any offence involving professional conduct;

3.4.4. The bidder is debarred/ blacklisted by a national level Procuring agency/Employer and hence debarred due to involvement in corrupt and fraudulent practices, or performance failure or due to breach of bid securing declaration.

3.5. As and when required, bidders shall provide to the Procuring agency/Employer evidence of their eligibility, proof of compliance with the necessary legal requirements to carry out the contract effectively.

4. **Eligible Material and Equipment**

4.1. All the material and equipment to be mobilized under the contract shall have their origin in eligible source countries, and all expenditures made under the contract will be limited to such materials and equipment. For this purpose, ineligible countries are stated in the section-IV titled as “Eligible Countries”.

B. BIDDING DOCUMENTS

5. **Contents of Bidding Documents**

5.1. The scope of Works, bidding procedures, and terms and conditions of the contract are prescribed in the bidding documents. In addition to the Invitation for Bids, the bidding documents which should be read in conjunction with any addenda issued in accordance with ITB 7.1 include:

i. Section I Instructions to Bidders (ITBs)

ii. Section II Bid Data Sheet (BDS)

iii. Section III Evaluation and Qualification Criteria

iv. Section IV Bidding Forms

v. Section V Eligible Countries

vi. Section VI Works Requirements

vii. Section VII General Conditions of Contract (GC)

viii. Section VIII Particular Conditions of Contract (PC

ix. Section IX Contract Forms

5.2. The bidder is expected to examine all instructions, forms, specifications, terms and conditions prescribed in the bidding documents. Failure to furnish all the information required in the bidding documents will be at the bidder's risk and may result in the rejection of his bid.

6. **Clarification of Bidding Document, Pre-bid Meeting**

6.1. A prospective bidder requiring any clarification of the bidding document may notify the Procuring agency/Employer through **EPADS v2.0**.

6.2. The Procuring agency/Employer shall respond to the request for clarification in accordance with the Public Procurement Rules 2026, Rule No.38 i.e. **Clarifications of bids**.

6.3. Should the Procuring Agency deem it necessary to amend the BIDDING document as a result of a clarification, it shall do so following the procedure under **ITB 7**.

6.4. If indicated in the **BDS**, the bidder's designated representative is invited at the bidder's cost to attend a pre-bid meeting at the place, date and time mentioned in the BDS. During this pre-bid meeting, prospective bidders may request clarification of the schedule of requirement, the evaluation criteria or any other aspects of the bidding documents.

6.5. Minutes of the pre-bid meeting, if applicable, including the text of the questions asked by bidders, including those during the meeting (without identifying the source) and the responses given, together with any responses prepared after the meeting will be uploaded on **EPADS v2.0**. Any modification to the bidding documents that may become necessary as a result of the pre-bid meeting shall be made by the Procuring agency/Employer exclusively through the use of an Addendum pursuant to **ITB 7**. Non-attendance at the pre-bid meeting will not be a cause for disqualification of a bidder.

6.6. The bidder is advised to visit and examine the Site of Works and its surroundings and obtain for itself on its own responsibility all information that may be necessary for preparing the bid and entering into a contract for construction of the Works. The costs of visiting the Site shall be at the bidder's own expense.

6.7. The bidder and any of its authorized personnel will be granted permission by the Procuring agency/Employer to enter upon its premises and lands for the purpose of such visit, but only upon the express condition that the bidder and its personnel will release and indemnify the Procuring agency/Employer from and against all liability in respect thereof, and will be responsible for death or personal injury, loss of or damage to property, and any other loss, damage, costs, and expenses incurred as a result of the inspection.

7. **Amendment of Bidding Documents**

7.1. The procuring agency may issue notification of any change, addition, modification or deletion in accordance with the Public Procurement Rules 2026, rule no. 34 i.e. **Bidding Documents**.

7.2. To give prospective bidders reasonable time in which to take an addendum/corrigendum into account in preparing their bids, the Procuring agency/Employer may, at its discretion, extend the deadline for the submission of bids:
Provided that the Procuring agency/Employer shall extend the deadline for submission of bid in pursuance of Public Procuement Rules 2026, rule no. 39 i.e. ***Extension of time for submission of bids****, if such an addendum*

is issued within last three (03) days of the bid submission deadline.

C. PREPARATION OF BIDS

8. Language of Bid

8.1. The bid prepared by the bidder, as well as all correspondence and documents relating to the bid exchanged by the bidder and the Procuring agency/Employer shall be written in the English language unless specified in the **BDS**. Supporting documents and printed literature furnished by the bidder may be in another language provided they are accompanied by an accurate translation of the relevant pages in the English language unless specified in the **BDS**, in which case, for purposes of interpretation of the bidder, the translation shall govern.

9. **Documents Comprising the Bids**

9.1. The Bid prepared by the Bidder shall constitute the following components: -

9.1.1. Documentary evidence established in accordance with ITB 9 that the material and equipment to be utilized by the Bidder for the executions of works are eligible material and equipment and conform to the Bidding Documents;

9.1.2. Documentary evidence established in accordance with ITB 10 that the Bidder has been authorized to carry out the Construction works;

9.1.3. Documentary evidence established in accordance with ITB 10 that the Bidder is eligible and/or qualified for the subject Bidding process;

9.1.4. Letter of Bid and Schedules and Bid Prices completed in accordance with ITB 11 and 12;

9.1.5. Completed schedules as required, including priced Bill of Quantities in accordance with ITB 11.

9.1.6. Technical Proposal completed in all aspects in accordance with ITB 14.

9.1.7. Bid security or Bid Securing Declaration furnished in accordance with ITB 16;

9.1.8. Any other Document required in the BDS.

9.2. In addition to the requirements, Bids submitted by a JV shall include a copy of the Joint Venture Agreement entered into by all members. Alternatively, a letter of intent to execute a Joint Venture Agreement in the event of a successful Bid shall be signed by all members and submitted with the Bid, together with a copy of the proposed Agreement. Bids submitted by a joint venture of two (2) or more firms specified in Bidding Data, shall comply with the following requirements:

9.2.1. The bid, and in case of a successful bid, the Form of Contract Agreement shall be signed by all members so as to be legally binding on all partners;

9.2.2. One of the joint venture partners shall be nominated as being in-charge; and this authorization shall be evidenced by submitting a power of attorney signed by legally authorized signatories of all the joint venture partners;

9.2.3. For the partner-in-charge shall always be duly authorized to deal with the Employer regarding all matters related with and/or incidental to the execution of Works as per the terms and Conditions of Contract and in this regard to incur any and all liabilities, receive instructions, give binding undertakings and receive payments on behalf of the joint venture;

9.2.4. All partners of the joint venture shall at all times and under all circumstances be liable jointly and severally for the execution of the Contract in accordance with the Contract terms and a statement to this effect shall be included in the authorization mentioned under Sub-Para(b) above as well as in the Letter of Bid and in the Form of Contract Agreement (in case of a successful bid); and

9.2.5. A copy of the agreement entered into by the joint venture partners shall be submitted with the bid stating the conditions under which it will function, its period of duration, the persons authorized to represent and obligate it and which persons will be directly responsible for due performance of the Contract and can give valid receipts on behalf of the joint venture, the proportionate participation and corresponding duties & responsibilities of the several firms forming the joint venture, and any other information necessary to permit a full appraisal of its functioning. No amendments/modifications whatsoever in the joint venture agreement shall be agreed to between the joint venture partners without prior written consent of the Employer.

9.3. The Bidder shall furnish, as part of its Bid, all those documents establishing the eligibility in conformity to the terms and conditions specified in the Bidding Documents for all material, equipment and works which the Bidder proposes to execute.

9.4. The documentary evidence of conformity of the material, equipment and works to the Bidding Documents may be in the form of literature, drawings, and data, and shall consist of:

9.4.1. a detailed description of the work methodology, approach, schedule and resources to be mobilized at site;

9.4.2. any other procurement specific documentation requirement as stated in the BDS.

9.5. The Bidder shall furnish in the Letter of Bid name(s) of the potential DAAB member(s) and attach their curriculum vitae. The list of potential DAAB member(s) proposed by the Employer (Contract Data 21.1) and by the Bidder (Letter of Bid) shall be subject to mutual review and agreement of the Parties in accordance with Sub-Clause 21.1 of the Conditions of Contract, and shall form the basis for the constitution of the DAAB in the event of Contract award.

10. **Documents Establishing Eligibility and Qualification of the Bidder**

10.1. The bidder shall furnish, as part of its bid, all those documents establishing the bidder's eligibility to participate in the bidding process and/or its qualification to perform the contract if its bid is accepted.

10.2. The documentary evidence of the bidder's eligibility to bid shall establish to the satisfaction of the Procuring agency/Employer that the bidder, at the time of submission of its bid, is from an eligible country as defined in Section-V titled as "Eligible Countries".

10.3. The documentary evidence of the bidder's qualification to perform the contract if its bid is accepted shall establish to the satisfaction of Procuring agency/Employer that:

10.3.1. The bidder has the financial and technical capability necessary to perform the Contract, meets the qualification criteria specified in Section-III, Evaluation and Qualification Criteria and **BDS**.

10.3.2. In the case of a bidder not doing business within Pakistan, the bidder is or will be (if awarded the contract) represented by a local bidder (Joint Venture) in accordance with the PEC works bylaws, and in case of award of works such foreign firm is required to participate in the execution of works to carry out its obligations as prescribed in the Conditions of Contract and /or Technical Specifications.

10.3.3. That the bidder meets the qualification criteria listed in Section-III, Evaluation and Qualification Criteria and **BDS**.

11. **Letter of Bid and Schedules**

11.1. The Bidder shall fill the Form of Bids furnished in the bidding documents. The Bids Form must be completed without any alterations to its format and no substitute shall be accepted.

12. **Bid Prices**

12.1. The bid prices quoted by the bidder in the Bidding Forms, Bill of Quantities and in the Price Schedule to Bid shall conform to the requirements specified below or exclusively mentioned hereafter in the

bidding documents.

12.2. The bidder shall fill in rates and prices for all items of the Works described in the Bill of Quantities. If a Price Schedule shows items listed but not priced, their prices shall be construed to be included in the prices of other items in the Bill of Quantities and will not be paid for separately by the Procuring agency/Employer.

12.3. The Bid price to be quoted in the Form of Bid in accordance with ITB 11 shall be the total price of the bid

12.4. Unless otherwise specified in the BDS and the Contract, the rates and prices quoted by the bidder are subject to adjustment during the performance of the Contract in accordance with the provisions of the Conditions of Contract.

12.5. Unless otherwise specified in the **BDS** and the Contract, the rates and prices quoted by the bidder are subject to adjustment during the performance of the Contract in accordance with the provisions of the Conditions of Contract.

12.6. If so specified in ITB 1.1, bids may be invited for individual lots (contracts) or for any combination of lots (packages).

12.7. Prices quoted by the Bidder shall either be fixed or adjustable during the Bidder’s performance of the contract if specified in the BDS.

12.8. All duties, taxes, and other levies payable by the Contractor under the Contract, or for any other cause, as of the date twenty-eight (28) days prior to the deadline for submission of bids, shall be included in the rates and prices and the total bid price submitted by the bidder.

13. **Currencies of Bid and Payment**

13.1. The unit rates and the prices shall be quoted by the Bidder entirely Pakistani Rupees. A Bidder expecting to incur expenditures in other currencies for inputs to the Works supplied from outside the Employer’s country (referred to as the “Foreign Currency Requirements”) shall indicate in Table III of Schedule-A to Bid the proportion of the Bid Price (excluding Provisional Sums) needed by him for the payment of such Foreign Currency

Requirements; in such case the unit rates and the prices shall be quoted by the Bidder in Equivalent Pakistani Rupees.Comparison of Bids and tie of Bid shall be treated in accordance with the Public Procurement rules 2026, rule no. 42.

14. **Documents Comprising the Technical Proposal**

14.1. The bidder shall furnish a Technical Proposal including a statement of work methods, equipment, personnel, schedule and any other information as stipulated in Section IV– Bidding Forms, in sufficient detail to demonstrate the adequacy of the bidder’s proposal to meet the work requirements and the completion time.

15. **Bid Validity Period**

15.1. Bids shall remain valid for the period specified in the BDS after the bid submission deadline prescribed by the Procuring agency/Employer. A bid valid for a shorter period shall be rejected by the Procuring agency/Employer as non-responsive. The period of bid validity will be determined from the complementary bid securing instrument i.e. the expiry period of bid security or bid securing declaration as the case may be.

15.2. Under exceptional circumstances, prior to the expiration of the initial Bids/Bid validity period, the Procuring Agency may request the Bidders’ consent to an extension of the period of validity of their Bids/Bid. Such request for extension of the period of bid validity shall be carried out in accordance with the Public Procurement rules 2026, rule no. 37 i.e. Bid Validity.

16. **Bid Security or Bid Securing Declaration**

16.1. Pursuant to ITB 10.1 unless otherwise specified in the BDS, the bidder shall furnish as part of its bid, a Bid Security in accordance with the Public Procurement Rules 2026, rule no. 36 in the amount and currency specified in the BDS or Bid Securing Declaration as specified in the BDS in the format provided in Section IV (Bidding Forms).

In case Procuring agency/Employer is inviting bids in lots / packages, the

bidder shall be required to submit his bid security against the respective lot/ package for which he is submitting his bid.
Until the development of functionality of auto verification of financial instrument in **EPADS v2.0**, the scanned copy of bid security or bid securing declaration, as the case may be, shall be uploaded on **EPADS v2.0** whereas the original instrument to be submitted to the procuring agency before closing of bid submission deadline, failing which shall result in rejection of Bid as non-responsive.

16.2. The Bid Security shall be denominated in the local currency or in another freely convertible currency, and it shall be in the form specified in the BDS which shall be in any of the following:

16.2.1. A bank guarantee, an irrevocable letter of credit issued by a Scheduled bank in the form provided in the Bidding Documents or another form acceptable to the Procuring agency/Employer and valid for twenty-eight (28) days beyond the end of the validity of the Bid. This shall also apply if the period for Bid Validity is extended. In either case, the form must include the complete name of the bidder;

16.2.2. A cashier’s or certified cheque; or

16.2.3. Another security as indicated in the **BDS**.

16.3. The Bid Security or Bid Securing Declaration shall be in accordance with the Form of the Bid Security or Bid Securing Declaration included in Schedule to Bid or another form approved by the Procuring agency/Employer prior to the bid submission.

16.4. The Bid Security shall be payable promptly upon written demand by the Procuring agency/Employer in case any of the conditions listed in **ITB 16.9** are invoked.

16.5. Any bid not accompanied by a Bid Security or Bid Securing Declaration in accordance with **ITB 16.1 or 16.3** shall be rejected by the Procuring agency/Employer and shall be declared as non-responsive bid, pursuant to **ITB 25**.

16.6. Unsuccessful bidders' Bid Security will be discharged or returned as promptly as possible, however in no case later than thirty (30) days after the expiration of the period of Bid Validity prescribed by the Procuring agency/Employer pursuant to **ITB 15**. The Procuring agency/Employer shall make no claim to the amount of the Bid Security, and shall promptly return the Bid Security document, after whichever of the following that occurs earliest:

16.6.1. The expiry of the Bid Security;

16.6.2. The entry into force of a procurement contract and the provision of a performance security (or guarantee), for the performance of the contract if such a security (or guarantee), is required by the Biding documents;

16.6.3. The rejection by the Procuring agency/Employer of all Bids;

16.6.4. The withdrawal of the bid prior to the deadline for the submission of bids, unless the biding documents stipulate that no such withdrawal is permitted.

16.7. The successful bidder's Bid Security will be discharged upon the bidder signing the contract pursuant to **ITB 38**, or furnishing the performance security (or guarantee), pursuant to **ITB 39**.

16.8. The Bid Security may be forfeited or the Bid Securing Declaration executed:
if a Bidder:

16.8.1. Withdraws its Bid during the period of Bid Validity as specified by the Procuring agency/Employer, and referred by the bidder on the Form of Bid except as provided for in ITB 15.2; or

16.8.2. In the case of a successful bidder, if the bidder fails:

16.8.2.1. to sign the contract in accordance with ITB 38; or

16.8.2.2. to furnish performance security (or guarantee) in accordance with ITB 39.

16.9. In case of Bid Security issued by the foreign bank is allowed by the Procuring agency/Employer, the same should be counter guaranteed by a corresponding bank in Pakistan. Furthermore, in case of joint venture, it should be in the name of Joint venture to ensure joint responsibility. In case the JV is not legally constituted at the time of bid submission, the bid security or bid securing declaration shall be in the names of Joint Venture or Lead/either Firm of the JV or in ratio of shares of the individual JV partners, submitting the bid.

17. **Withdrawal of Bids**

17.1. The Bidder shall prepare and submit Bids through EPADS with due diligence after carefully reading all the terms and condition before Bid submission deadline.

D. SUBMISSION OF BIDS

20. **Submission of Bids**

20.1. All bids shall be submitted through **EPADS v2.0**.

21. **Deadline for Submission of Bids**

21.1. All bids shall be received through **EPADS v2.0** not later than bid submission deadline as specified in the **BDS**.

21.2. The Procuring agency/Employer may, under exceptional circumstances and at its discretion, extend the deadline for the submission of bids, pursuant to Public Procurement Rules 2026, rule no. 39 Extension of Time for submission of bid, by amending the Bidding Documents in accordance with ITB 7, in which case all rights and obligations of the Procuring agency/Employer and bidders previously subject to the deadline will thereafter be subject to the new deadline.

22. **Withdrawal, Substitution and Modification of Bids**

22.1. A bidder may substitute or modify his bid after it has been submitted, provided that written notice of the substitution or modification of the bid, is received by the Procuring agency/Employer prior to the deadline for submission of bids.

22.2. Revised bid may be submitted after the substitution or modification made in the original bid in accordance with ITB 20.1.

E. OPENING AND EVALUATION OF BIDS

23. **Opening of Bids**

23.1. The Procuring Agency will open bids in accordance with the Public Procurement rules 2026, rule no.40 as specified in the **BDS**.

24. **Confidentiality**

24.1. Information relating to the examination, clarification, evaluation and comparison of bids and recommendation of contract award shall not be disclosed to bidders or any other persons not officially concerned with such process until the time of the announcement of the respective evaluation report.

25. **Clarification of Bids**

25.1. Clarification of Bidding Documents shall be carried out in accordance with the Public Procurement Rules 2026, rule no. 38 i.e. Clarifications.

25.2. The alteration or modification in the bid which in any case affect the following parameters will be considered as a change in the substance of a bid:

25.2.1. evaluation & qualification criteria;

25.2.2. required scope of work;

25.2.3. contract price;

25.2.4. all securities requirements;

25.2.5. tax requirements;

25.2.6. terms and conditions of bidding documents.

25.2.7. change in the ranking of the bidder

26. **Preliminary Examination of Bids**

26.1. Prior to the detailed evaluation of bids, the Procuring agency/Employer will determine whether each bid:

26.1.1. has been prepared as per the format and contents defined by the Procuring agency/Employer in the bidding documents;

26.1.2. has been properly signed;

26.1.3. is accompanied by the required securities; and

26.1.4. is substantially responsive to the requirements of the bidding documents.
The Procuring agency/Employer's determination of a bid's substantial responsiveness will be based on the contents of the bid itself.

26.2. A substantially responsive Bid is one which conforms to all the terms, conditions, and specifications of the Bidding Documents, without material deviation or reservation. A material deviation or reservation is one that: -

26.2.1. affects in any substantial way the scope, quality, or performance of the Works;

26.2.2. limits in any substantial way, inconsistent with the bidding documents, the Procuring agency/Employer's rights or the bidders' obligations under the Contract; or

26.2.3. if rectified, would affect unfairly the competitive position of other bidders presenting substantially responsive bids.

26.3. The Procuring agency/Employer will confirm that the documents and information specified under ITB 9, 10 and 11 have been provided in the bid. If any of these documents or information is missing, or is not provided in accordance with the Instructions to Bidders, the bid shall be rejected.

26.4. The Procuring agency/Employer may waive-off any minor informality, nonconformity, or irregularity in a bid which does not constitute a material deviation, provided such waiver does not prejudice or affect the relative ranking of any Bidder.

Explanation: A minor informality, non-conformity or irregularity is one that is merely a matter of form and not of substance. It also pertains to some of the invitation that can be corrected or waived without being prejudicial to other bidders. The defect or variation is immaterial when the effect on quantity, quality, or delivery is negligible when contrasted with the total cost or scope of the works. The Procuring agency/Employer either shall give the bidder an opportunity to cure any deficiency resulting from a minor informality or irregularity in a bid or waive the deficiency, whichever is advantageous to the Procuring agency/Employer. Examples of minor informalities or irregularities include failure of a bidder to –

26.4.1. Submit the number of copies of signed bids required by the invitation;

26.4.2. Furnish required information concerning the number of its employees;

26.4.3. the firm submitting a bid has formally adopted or authorized, before the date set for opening of bids, the execution of documents by typewritten, printed, or stamped signature and submits evidence of such authorization and the bid carries such a signature.

26.5. Provided that a Technical Bid is substantially responsive, the Procuring agency/Employer may request the bidder to submit the necessary information or documentation, within a reasonable period of time, to rectify nonmaterial nonconformities or omissions in the Technical Bid related to documentation requirements. Requesting information or documentation on such nonconformities shall not be related to any such aspect of the

technical Proposal linked with the ranking of the bidders. Failure of the bidder to comply with the request may result in the rejection of its bid.

26.6. Provided that a Technical Bid is substantially responsive, the Procuring agency/Employer shall rectify quantifiable nonmaterial nonconformities or omissions related to the Financial Proposal. To this effect, the Bid Price shall be adjusted, for comparison purposes only, to reflect the price of the missing or nonconforming item or component.

26.7. If a bid is not substantially responsive, it will be rejected by the Procuring agency/Employer and may not subsequently be evaluated for complete technical responsiveness.

27. **Examination of Terms and Conditions; Technical Evaluation**

27.1. The Procuring agency/Employer shall examine the bid to confirm that all terms and conditions specified in the GC and the PC have been accepted by the bidder without any material deviation or reservation.
For this purpose:
"**Deviation**" means departure from the requirements specified in the Bidding Document.
"**Reservation**" means setting of limiting conditions or withholding from complete acceptance of the requirements specified in the Bidding Document.

27.2. The Procuring agency/Employer shall evaluate the technical aspects of the bid submitted in accordance with ITB 28, to confirm that all requirements specified in Section VI – Works Requirement, Technical Specifications of the Bidding Documents have been met without material deviation or reservation.

27.3. If after the examination of the terms and conditions and the technical evaluation, the Procuring agency/Employer determines that the bid is not substantially responsive in accordance with ITB 25, it shall reject the bid.

28. **Correction of Arithmetic Errors**

28.1. Bids determined to be substantially responsive will be checked for any arithmetic errors. Errors will be corrected as follows: -

28.1.1. if there is a discrepancy between unit prices and the sub-total price that is obtained by multiplying the unit price and quantity, the unit price shall prevail, and the sub-total price shall be corrected, unless in the opinion of the Procuring agency/Employer there is an obvious misplacement of the decimal point in the unit price, in which the total price as quoted shall govern and the unit price shall be corrected;

28.1.2. if there is an error in a total corresponding to the addition or subtraction of sub-totals, the sub-totals shall prevail, and the total shall be corrected; and

28.1.3. where there is a discrepancy between the amounts in figures and in words, the amount in words will govern.

28.1.4. Where there is discrepancy between grand total of price schedule and amount mentioned on the Form of Bid, the amount referred in Price Schedule shall be treated as correct subject to elimination of other errors.

28.2. The amount stated in the Bid will, be rectified by the Procuring agency/Employer in accordance with the above procedure for the correction of errors and, with, the concurrence of the bidder, shall be considered as binding upon the bidder. If the bidder does not accept the corrected amount, its bid shall be rejected after forfeiture of Bid Security or execution of the Bid Securing Declaration, as the case may be, in accordance with ITB 39.3.

29. **Conversion to Single Currency**

29.1.
Comparison of bids quoted in different currencies and conversion of bids into a single curre
Procurement Rule 2026, rule no. 42(2) as specified in the BDS.

30. **Evaluation of Bids**

30.1. The Procuring agency/Employer shall evaluate and compare only the bids determined to be substantially responsive, pursuant to ITB 25.

30.2. In evaluating the Technical Proposal of each Bid, the Procuring agency/Employer shall use the criteria and methodologies listed in the BDS and in terms of works requirement. No other evaluation criteria or methodologies shall be permitted.

30.3. The Procuring agency/Employer's evaluation of a bid will take into account:

30.3.1. the bid price, excluding provisional sums and the provision, if any, for contingencies in the summary bill of quantities, but including day work items, where priced competitively;

30.3.2. converting the amount resulting from applying above, if relevant, to a single currency in accordance with ITB 27;

30.4. The estimated effect of the price adjustment provisions of the Conditions of Contract, applied over the period of execution of the Contract, shall not be taken into account in bid evaluation.

30.5. If these bidding documents allow bidders to quote separate prices for different lots, and the award to a single bidder of multiple lots, the methodology of evaluation to determine the lowest evaluated lot combinations in the Form of Bid, is specified in the BDS.

30.6. If the bid, which results in the Evaluated Bid Price (Successful Bid), is seriously unbalanced or front loaded in the opinion of the Employer, the Employer may require the Bidder to produce detailed price analyses for any or all items of the Bill of Quantities, to demonstrate the internal consistency of those prices with the construction methods and schedule proposed. After evaluation of the price analyses, taking into consideration the schedule of estimated Contract payments, the Employer may require that the amount of the performance security be increased at the expense of the Bidder to a level sufficient to protect the Employer against financial loss in the event of default of the successful Bidder under the Contract.

Explanation:

“Unbalanced” or “front-loaded” bids consist of deliberately submitting bids with artificially high prices or unit rates for the early stages of a construction project, offset by artificially low prices or unit rates for the later stages of the project, to improve the contractor’s cash flow.

31. **Domestic Preference**

31.1. If the BDS so specifies, the Procuring agency/Employer will grant a margin of preference to the domestic contractor in line with the rules, regulations, regulatory guides or instructions issued by the Authority from time to time.

32. **Determination of Successful Bid**

32.1. The Procuring agency/Employer shall compare the evaluated bids in accordance with the predefined bidding procedure, of all substantially responsive bids to determine the Successful bidder.

33. **Qualification of Bidder**

33.1. The Procuring agency/Employer shall determine to its satisfaction whether the bidder is substantially responsive and whose bid is declared as Successful bid either continues to meet (if prequalification applies) or meets (if post-qualification applies) the qualifying criteria specified in Evaluation and Qualification Criteria.
Note: In case of international bidding, the parameters for incorporation or licensing within Pakistan may be fulfilled as part of post qualification.

33.2. The determination shall be based upon an examination of the documentary evidence of the bidder’s qualifications submitted by the bidder, pursuant to ITB 10.

33.3. Prior to contract award, the Procuring agency/Employer will verify that the successful bidder (including each member of a JV) is not blacklisted/debarred. The Procuring agency/Employer will conduct the same verification for each sub-contractor proposed by the successful bidder.

34. **Sub-Contractors**

34.1. The bidder shall provide details regarding any specialized sub-contractor to the Procuring agency/Employer. In case change of sub-contractors, the bidder shall promptly notify the Procuring agency/Employer and obtain approval for replacement of sub-contractors.

34.2. Bidders may propose sub-contracting up to the percentage of total value of contracts or the volume of works as specified in the BDS.

35. **Abnormally Low Financial Bid**

35.1. A procuring Agency may reject abnormally low bids in accordance with the Public Procurement Rules 2026, rule no. 43. The decision of the Procuring agency/Employer to reject a bid and reasons for the decision shall be recorded in the procurement proceedings and promptly communicated to the bidder concerned. Moreover, the Procuring agency/Employer shall not incur any liability solely by rejecting abnormally bid

Guidance for Procuring agency/Employer:

An abnormally low Bid means, a Bid containing Bid price that is less or lesser than twenty five percent (25%) of the Procuring agency/Employer's estimate.

35.2. The Procuring agency/Employer will determine to its satisfaction whether the bidder that is selected as having submitted the successful bid is qualified to perform the contract satisfactorily, in accordance with the criteria listed in ITB 10.

35.3. The determination will take into account the bidder's financial and technical capabilities. It will be based upon an examination of the documentary evidence of the bidder's qualifications submitted by the bidder, pursuant to ITB 10, as well as such other information as the Procuring agency/Employer deems necessary and appropriate. Factors not included in these bidding documents shall not be used in the evaluation of the bidders' qualifications.

35.4. Procuring agency/Employer may seek "Certificate for Independent Price Determination" from the bidder and the results of reference checks may be used in determining award of contract.

Explanation: *The Certificate shall be furnished by the bidder. The bidder*

shall certify that the price is determined keeping in view of all the essential aspects such as raw material, its processing, value addition, optimization of resources due to economy of scale, transportation, insurance and margin of profit etc.

35.5. An affirmative determination will be a prerequisite for award of the contract to the bidder. A negative determination will result in rejection of the bidder's bid, in which event the Procuring agency/Employer will proceed to the next ranked bidder to make a similar determination of that bidder's capabilities to perform satisfactorily.

F. AWARD OF CONTRACT

36. **Criteria of Award**

36.1. Subject to ITB 34 and 35, the Procuring agency/Employer will award the Contract to the bidder whose bid has been determined to be substantially responsive to the bidding documents and who has been declared as Successful Bidder, provided that such bidder has been determined to be:

36.1.1. eligible in accordance with the provisions of ITB 3;

36.1.2. is determined to be qualified to perform the Contract satisfactorily; and

36.1.3. Successful negotiations have been concluded, if any.

37. **Negotiations**

37.1. The Committee of the Procuring agency/Employer may negotiate with the Successful Bidder in accordance with Public Procurement Rules 2026 rule no. 26(3).

38. **Procuring agency/Employer's Right to reject All Bids**

38.1. The procuring agency has the right to reject all bids in accordance with the Public Procurement Rules 2026, rule no. 45 However, the Authority (i.e.

PPRA) may call from the Procuring agency/Employer the justification of those grounds.

39. **Notification of Award**

39.1. The procuring agency shall announce and publish the evaluation result in accordance with the Public Procurement Rules 2026, rule no 48.

39.2. Where no complaints have been lodged, the bidder whose bid has been accepted will be notified of the award by the Procuring agency/Employer prior to expiration of the bid validity period through EPADS. However, the Procuring agency/Employer shall not award any procurement contract at least for five (05) days after the announcement of final evaluation report. The notification letter (herein after and in the condition of the contract and contract form called “Letter of Acceptance” will specify the sum that the Procuring agency/Employer will pay the successful bidder in consideration for the execution and completion of the works as prescribed by the Contract (hereinafter and in the Contract called the "Contract Price).

39.3. The notification of award will constitute the formation of the Contract, subject to the bidder furnishing the Performance Security (or guarantee) in accordance with ITB 39 and signing of the contract in accordance with ITB 38.

39.4. Upon the successful bidder’s furnishing of the performance security (or guarantee) pursuant to ITB 39, the Procuring agency/Employer will promptly notify each unsuccessful bidder, the name of the successful bidder and the Contract amount and will discharge the Bid Security or Bid Securing Declaration of the bidder(s) pursuant to ITB 16.

40. **Signing of Contract**

40.1. Promptly after notification of award, Procuring agency/Employer shall send the successful bidder the draft agreement, incorporating all terms and conditions as agreed by the parties to the contract.

40.2. Immediately after the Redressal of grievance by the GRC, and after fulfillment of all conditions precedent of the Contract Form, the successful bidder and the Procuring agency/Employer shall sign the contract.

40.3. Where no formal signing of a contract is required, work order issued to the bidder shall be construed to be the contract.

41. **Performance Security (or Guarantee)**

41.1. After the receipt of the Letter of Acceptance, the successful bidder, within the specified time, shall deliver to the Procuring agency/Employer a Performance Guarantee in the amount and in the form stipulated in the BDS and PC, denominated in the type and proportions of currencies in the Letter of Acceptance and in accordance with the Conditions of Contract.

41.2. If the Performance Guarantee is provided by the successful bidder and it shall be in the form specified in the BDS which shall be in any of the following:

41.2.1. certified cheque, cashier’s or manager’s cheque, or bank draft;

41.2.2. irrevocable letter of credit issued by a scheduled bank of Pakistan or in the case of an irrevocable letter of credit issued by a foreign bank, the letter shall be confirmed or authenticated by a scheduled bank of Pakistan;

41.2.3. bank guarantee confirmed by a reputable local bank or, in the case of a successful foreign bidder, bonded by a foreign bank; or

41.2.4. surety bond callable upon demand issued by any reputable surety or insurance company.
Any Performance Guarantee submitted shall be enforceable in Pakistan.

41.3. Failure of the Most Advantageous Bidder to comply with the requirement of ITB 40 shall constitute sufficient grounds for the annulment of the award and forfeiture of the Bid Security or declare blacklisted (in case bid securing declaration is submitted) in which event the Procuring agency/Employer may make the award to the next most advantageous bidder or reinitiate the procurement process afresh (as a case may be).

42. **Advance Payment**

42.1. Advance payment will be provided to the bidder in percentage and in the manner as agreed by the both parties in terms of Conditions of the Contract.

42.2. The Procuring agency/Employer will provide an advance payment as stipulated in the Conditions of Contract, subject to a maximum amount, as stated and/or Conditions of the Contract. The advance payment request shall be accompanied by an advance payment security (guarantee) in the form provided in Section X. For the purpose of receiving the advance payment, the bidder shall make and estimate of, and include in its bid, the expenses that will relate to the purchase of equipment, machinery, materials, and on the engagement of labor during the first month beginning with the date of the Procuring agency/Employer's "Notice to Commence" as specified in the PCC.

43. **General Performance of the Bidders**

43.1. The Procuring agency/Employer reserves the right to obtain information regarding performance of the bidders on their previously awarded contracts / works. The Procuring agency/Employer may seek information / report from the previous employer for consideration. However, the Procuring agency/Employer shall incorporate such parameters in the evaluation criteria and accordingly decide the fate of the bid submitted.

44. **Corrupt & Fraudulent Practices**

44.1. Procuring agencies (including beneficiaries of Government funded projects and procurement) as well as Bidders/Suppliers/Contractors under Government financed contracts, observe the highest standard of ethics during the procurement and execution of such contracts, and will avoid to engage in any corrupt and fraudulent practices.

G. GRIEVANCE REDRESSAL & COMPLAINT REVIEW MECHANISM

45. Grievance Redressal

45.1. Grievance Redressal shall be carried out in accordance with the PPRA, rules i.e. Redressal of grievances by the procuring agency and “Redressal of Grievances Regulations”.

H. MECHANISM OF BLACKLISTING

46. Mechanism of Blacklisting

46.1. The Procuring agency/Employer shall proceed Blacklisting of Bidders/Contractors in accordance with Public Procurement Rules 2026, rule no. 65 rule i.e. Blacklisting and “Blacklisting and Debarment of Bidders or Contractors.

Bid Data Sheet

Bid Data Sheet (BDS)

The following specific data for the procurement of works shall complement, supplement, or amend the provisions in the Instructions to Bidders (ITBs). Whenever there is a conflict, the provisions herein shall prevail over those in ITBs.

A. Introduction

ITB Number
Amendments of, and Supplements to, Clauses in the Instruction to Bidders

ITB Number1.1

Name of Procuring agency/Employer: **Sector Development (Capital Development Authority)**

The subject of procurement is: **ESTABLISHMENT OF CDA ONE WINDOW CELL AT G-7, ISLAMABAD.**

Period for completion of the works **3 Months**

Commencement date execution of the works: **01 Days**

Type of Procurement**:Local**

ITB Number2.1

Financial year for the operations of the Procuring agency/Employer: **2026-27**
Name of Project :

Name of financing institution:

Name and identification number of the Contract: **P211713**

ITB Number3.1

JV/Consortium or Association Allowed: **No**

Maximum number of members in the joint venture shall be: **Nil**.

B. Bidding Documents

ITB Number6.4

The Bidders may seek clarifications through **EPADS v2.0**: **Last Clarification Date: Tuesday, November 24, 2026**

C. Preparation of Bids

ITB Number8.1

The Language of all correspondences and documents related to the Bid is: **English**

ITB Number 5.1 & 9.1

The following documentsmust be includedto constitute the Bid

No

ITB Number9.4 (b)

Other procurement specific documentation requirements are:

The Firms must be registered with PEC and having a valid licensein Category C3 or above.

ITB Number12.4

The Bid price will be/will not be subject to the price adjustment **Nil**.

ITB Number12.6

The Bid price shall be adjusted in accordance with Schedule-A to Bid – “Schedule of Adjustment Data” if available.

ITB Number13.1

Bidders to quote entirely in**Pak rupees (PKR)**

ITB Number15.1

The Bid Validity period shall be **60 Days** days.

ITB Number16.1

The amount of Bid Security shall be ... *see section itemd and bid security*

The currency of the Bid Security shall be: **PKR**.

ITB Number16.2

The Bid Security shall be in the form of:**Pay Order, Call at Deposit**

D. Submission of Bids

ITB Number19.1

The deadline for Bid submission is:**Friday, November 27, 2026 11:00 AM**
Address for submission of Original Bid Security:**Room No 29, CDA Main Secretariat, Block No-III, First Floor, Sector G-7/4, Islamabad.**

ITB Number21.1
The Bid opening shall take place at:**EPADS v2.0**
Day : ***Friday***
Date: ***November 27, 2026***
Time : ***11:30 AM***

ITB Number27.1
The currency that shall be used for Bid evaluation and comparison purposes to convert all Bid prices expressed in various currencies is: **PKR Only**
The source of exchange rate shall be: **Nil**
The date of exchange rate shall be: **Nil**

ITB Number28.2 &28.5
Least Cost Based Selection (LCBS)
see Evaluation Criteria

ITB Number29.1
Domestic preference to apply.
Domestic preference:**No**
Preference to domestic or national suppliers or contractors shall be provided in accordance with policies of the Federal Government and/or in accordance with the regulations issued by the Authority.
If Yes, The percentage for the domestic preference alongwith calculation formula is provided in the evaluation and qualification criteria.

ITB Number32.2
Sub-contracting is allowed? : **No**

No% of the total value of the contract.

39.1 The Performance Security (or guarantee) shall be **3.00%**
39.2 The Performance Security (or guarantee) shall be in the form of:**Bank Guarantee**

Eligibility Criteria

All Active Taxpayers shall be eligible to participate in the procurement process, unless expressly excluded or otherwise restricted under the Eligibility Criteria specified by the Procuring Agency.

Required Registration
NADRA CITIZENSHIP (CNIC/NICOP) FBR (NTN) FBR (GSTN) PEC

Eligibility Criteria	Document
The SOEs firms registered with PEC in Category C-3 or above shall be eligible to participate in the procurement process of subject work.	Yes

Evaluation Criteria

Least Cost Based Selection (LCBS)

Jobs/Lots

Jobs Without Lots :

Job	Delivery Schedule	Quantity	Bid Security
ESTABLISHMENT OF CDA ONE WINDOW CELL AT G-7, ISLAMABAD.	**Address:** Room No 29, CDA Main Secretariat, Block No-III, First Floor, Sector G-7/4, Islamabad.**Schedule:** 90 Days **Quantity:** 1/job	1/job	5614157 PKR

Work Specifications and Market Rates

Jobs Without Lots :

Job: ESTABLISHMENT OF CDA ONE WINDOW CELL AT G-7, ISLAMABAD.

Specifications / Requirements:

Sr. No	Ref No.	Description	Unit	Quantity	Rate	Rate in Words	Amount
1	Subhead-I	MRS-2026 (2nd Bi-Annual-2026) Rawalpindi - Civil Works					
2	3/27–53	Clearing and Grubbing	sft	11742.25	5.29		62117
3	3-21	Excavation in foundation of building, bridges and other structures, including dagbelling, dressing, refilling around structure with excavated earth, watering and ramming lead upto one chain (30 m) and lift upto 5 ft. (1.5 m) 1)) b) By Excavator ii)Ordinary soil					

Sr. No	Ref No.	Description	Unit	Quantity	Rate	Rate in Words	Amount
4		For Footings	cft	12069.75	11.14		134457
5		For Brick Wall	cft	3088	11.14		34400
6	10-59/4	Providing, laying, watering and ramming brick or stone ballast 1½" to 2"(40 mm to 50 mm) gauge mixed with 25% sand, for floor foundation, complete in all respects.					
7		For Floor	cft		144.79		
8	18-105/3 (a)	Providing and laying sub-base course of stone product of approved quality and grade, including placing, mixing, spreading and compaction of sub-base material to required depth, camber, grade to achieve 100% maximum modified AASHO dry density, including carriage of all material to site of work except gravel and aggregate. i) Pit run or bed run gravel					

PUBLIC PROCUREMENT REGULATORY AUTHORITY (PPRA) EPADS

Sr. No	Ref No.	Description	Unit	Quantity	Rate	Rate in Words	Amount
9		For Floor	cft	15711	97.94		1538775
10	6-34/5(f)	Cement concrete plain including placing, compacting, finishing and curing complete (including screening and washing of stone aggregate): i) Ratio 1: 4: 8					
11		For Footings	cft	833.59	360.29		300334
12		For Brick Wall	cft	419.21	360.29		151037

PUBLIC PROCUREMENT REGULATORY AUTHORITY (PPRA) EPADS

Sr. No	Ref No.	Description	Unit	Quantity	Rate	Rate in Words	Amount
13	6-34/6(3)	Providing and laying reinforced cement concrete (including prestressed concrete), using Ordinary Portland Cement / Sulphate resisting cement / Slag cement as may be required; coarse sand and screened graded and washed aggregate, in required shape and design, including forms, moulds, shuttering, lifting, compacting, curing, rendering and finishing exposed surface, complete (but excluding the roof slab meant for human habitation cost of steel reinforcement, its fabrication and placing in position, etc.):- (a) Reinforced cement concrete in roof slab, beams, columns lintels, girders and other structural members laid in made units. situ or precast laid in position, or prestressed members cast in situ, complete in all respects:- 3) Type C (nominal mix 1: 2: 4)					

Sr. No	Ref No.	Description	Unit	Quantity	Rate	Rate in Words	Amount
14		For Footings	cft	2737.5	773.55		2117593
15		For Plinth Beam	cft	220.88	773.55		170858
16		For Floor	cft	6624.48	773.55		5124366
17		For Mezzanine Floor	cft	1329	773.55		1028048
18	8	RCC (1:1.5:3) - 3500 PSI Cube Strength					

PUBLIC PROCUREMENT REGULATORY AUTHORITY (PPRA) EPADS

Sr. No	Ref No.	Description	Unit	Quantity	Rate	Rate in Words	Amount
19	6-34/6(2)	Providing and laying reinforced cement concrete (including prestressed concrete), using Ordinary Portland Cement / Sulphate resisting cement / Slag cement as may be required; coarse sand and screened graded and washed aggregate, in required shape and design, including forms, moulds, shuttering, lifting, compacting, curing, rendering and finishing exposed surface, complete (but excluding the roof slab meant for human habitation cost of steel reinforcement, its fabrication and placing in position, etc.):- (a) Reinforced cement concrete in roof slab, beams, columns lintels, girders and other structural members laid in made units. situ or precast laid in position, or prestressed members cast in situ, complete in all respects:- 3) Type C (nominal mix 1: 1.5: 3)					

Sr. No	Ref No.	Description	Unit	Quantity	Rate	Rate in Words	Amount
20		For Pedestal/Columns	cft	801.56	853.15		683853
21		For Stiffener Columns	cft	1204.5	853.15		1027619
22	6-40/37	Providing and laying damp proof course of cement concrete 1:2: 4 (using cement, sand and shingle), including bitumen coating : b) with 2 coats of bitumen: iii) 3" thick (75 mm)					
23		For Plinth Beam	Sft	197.75	173.16		34242
24		For Brick Wall	Sft	197.75	173.16		34242
25	7-45/4	Pacca brick work in foundation and plinth in:-) Cement, sand mortar:- Ratio 1:6					
26		For Foundation	cft	897.78	400.35		359426
27	7-45/5	Pacca brick work in ground floor:-) Cement, sand mortar:- Ratio 1:6					
28		For 1st Floor etc	cft	2429.63	410.64		997701
29	11-69/10	Cement plaster 1:5 upto 20' (6.00 mm) height:-) ¾" (20 mm) thick					

Sr. No	Ref No.	Description	Unit	Quantity	Rate	Rate in Words	Amount
30		External Wall	sft	9725.84	64.18		624204
31	13-89-33	Providing and applying weather shield paint of approved quality on external surface of building including preparation of surface, application of primer complete in all respect:) a) new surface:	sft				
32		i) 1st coat	sft	5455.56	50.06		273105
33		ii) 2nd coat	sft	5455.56	27.62		150683
34	13-89/31(b)	Preparing surface and painting with Plastic Emulsion Paint:-					
35		i) 1st coat	sft	5455.56	17.91		97709
36		b) 2nd and each subsequent coat	sft	5455.56	13.95		76105
37	13-4 (d)	Painting old surfaces with Enamel Paint:- d) Painting guard bars, gates of iron bars, gratings, railing (including standards, braces etc.) and similar open work:-					
38		i) first coat	sft	7500	9.38		70350

Sr. No	Ref No.	Description	Unit	Quantity	Rate	Rate in Words	Amount
39		ii) each subsequent coat	sft	7500	7.88		59100
40	42/6-12 (b)(i)	Fabrication of mild steel reinforcement for cement concrete, including cutting, bending, laying in position, making joints and fastenings, including cost of binding wire and labour charges for binding of steel reinforcement (also includes removal of rust from bars): (a) Plain bars (b) Deformed bars (i) (Grade-60)					
41		For complete scope (Footings, Columns, Floor, Plinth Beam)	kg	16483.95	308.27		5081507

PUBLIC PROCUREMENT REGULATORY AUTHORITY (PPRA) EPADS

Sr. No	Ref No.	Description	Unit	Quantity	Rate	Rate in Words	Amount
42	6-57 (a)	Providing and mixing water reducing admixture conforming to ASTM C-94 to achieve the required consistency / workability or specified compressive strength, strictly within the dosage range of 0.05% to 1.00% by weight of cement in the concrete mix design complete in all respects as approved and directed by the Engineer In-Charge. a) Super Plasticizer	Gallon	1184.92	839.5		994742
43		Anchors					
44	N.S.I	Fixing and welding of anchor bolts in final position to be embedded in concrete complete in all respect as described in specification/drawings and as directed by the Engineer Incharge.	Nos.	210	1155		242550
45		Section-01: Steel Structure Works					

PROCUREMENT REGULATORY AUTHORITY (PPRA) EPADS

Sr. No	Ref No.	Description	Unit	Quantity	Rate	Rate in Words	Amount
46	N.S.R (handwritten; ‘25-10 + 25-11’ struck)	Design, engineering, procurement, fabrication, supply, transportation, loading/unloading and installation of Customized steel structure complete in all respects, including built-up tapered sections ASTM A572 Grade 50 (Fy = 345 MPa), hot-rolled I-sections, wide flange sections, channels, angles, plates, flats, square/rectangular/circular hollow sections (SHS/RHS/CHS), pipes (ASTM A36), base plates, stiffeners, gusset plates, splice plates, cleats, connection plates, miscellaneous structural steel, high-strength bolts, nuts, washer etc. and Z/C purlins, Z/C girts, eave struts, manufactured from ASTM A653 Grade 50 on structural steel members complete in all respect and in accordance with the contract drawings, specifications, and Engineer's approval.	Kg	90000	594.78		53530200

Sr. No	Ref No.	Description	Unit	Quantity	Rate	Rate in Words	Amount
47	9-46	Providing and applying torch-on water proofing bitumenous membrane of specified thickness (such as Roof-Grip/ Euro Bit) duly lapped/ connected by heating with Torch over ps-6 primer I/c preparation/ smoothen the surface complete in all respect as approved and directed by the Engineer Incharge. b) Aluminum Foiled ii) 4 mm thick	sft	10080	168.35		1696968

PUBLIC PROCUREMENT REGULATORY AUTHORITY (PPRA) EPADS

Sr. No	Ref No.	Description	Unit	Quantity	Rate	Rate in Words	Amount
48	26-213/48	Providing and fixing slip joint sandwich panels composed of two steel layers injected in between with polyurethane foam on existing surface, lightweight of specified density and fire resistance grade-B. The steel sheet layers are polyester coated hot dipped galvanized , sandwich sheets panels are painted with reflective, anti dust and durable electrostatic paint from both sides I/c the cost of flasing trims,screws,revits,sealants,tapes etc.complete in all respects as approved and directed by the Engineer Incharge. (vi)150 mm thick	sft	14703.38	3689.05		54241508
49		CIVIL / ARCHITECTURAL WORKS					
50		Termite Treatment					

PUBLIC PROCUREMENT REGULATORY AUTHORITY (PPRA) EPADS

Sr. No	Ref No.	Description	Unit	Quantity	Rate	Rate in Words	Amount
51	26-43	Spraying termite proofing by using liquid FMC/ Biflex/ Terminex xin/ Ms Hextar or equivalent @ specified suspension concentrate (SC), Mixing Ability-HEXTAR with Ratio (1:250) = 540 Sft or equivalent approved liquid applying with shower and certificate will be provided by the contractor for 10-years complete in all respect .as approved by the Engineer Incharge.	Sft	5536	12.7		70307
52		Marble Floor (Public Square)					

PUBLIC PROCUREMENT REGULATORY AUTHORITY (PPRA) EPADS

Sr. No	Ref No.	Description	Unit	Quantity	Rate	Rate in Words	Amount
53	10-36	Providing and laying 3/8" thick Prepolished Marble skirting/risers having uniform texture (spot less) of size 24"x6" of approved quality and shade with adhesive bond over 3/4" thick (1:2) cement sand mortor complete in all respect i/c the cost of matching sealer to finish the joints as approved and directed by the Engineer Incharge.i) China Verona	Sft	3748	317.2		1188866
54		Granite Works					

PUBLIC PROCUREMENT REGULATORY AUTHORITY (PPRA) EPADS

Sr. No	Ref No.	Description	Unit	Quantity	Rate	Rate in Words	Amount
55	10-48	Providing and laying of specific thickness full width Prepolished Marble slab for Vanities / Shelves / Treads/Window Cills , having Uniform texture (Spotless) with adhesive bond over 3/4" thick (1:2) cement sand mortor i/c the cost of matching sealer complete in all respects as approved and directed by the Engineer Incharge. ii) 3/4" thick Granite					
56	i	Entrance Steps	Sft	958	1147.25		1099066
57	ii	Stair Treads	Sft	147	1147.25		168646
58	iii	Lift Cladding	Sft	486	1147.25		557564
59	iv	Toilet Ledge	Sft	21	1147.25		24092
60	v	Window Sills Bath inner sides	Sft	23	1147.25		26387
61	vi	Vanity Top	Sft	62	1147.25		71130
62	vii	Planter Top	Sft	208	1147.25		238628
63		Wood Works					
64		Wooden Cabinets					

PUBLIC PROCUREMENT REGULATORY AUTHORITY (PPRA) EPADS

Sr. No	Ref No.	Description	Unit	Quantity	Rate	Rate in Words	Amount
65	12-58	Providing and fixing box type Kitchen Cabinet consisting of 3/4"thick both side Laminated MDF sheet shutter and boxes and back of 3 mm thick laminated MDF sheet i/c the cost of PVC edge binding duly hot pressed on all edges of the shutters /panels etc., with machine i/c the cost of self closing blum type hinges S.S, handles, screws, Glue and rawal plugs, locking arrangement complete in all respect as approved and directed by Engineer Incharge	Sft	519	1651.3		857025
66		Engineered Doors					

PUBLIC PROCUREMENT REGULATORY AUTHORITY (PPRA) EPADS

Sr. No	Ref No.	Description	Unit	Quantity	Rate	Rate in Words	Amount
67	12-6 (iii)	P/F 1½" (40mm) thick semi solid panelled or panelled and glazed doors comprising of solid wood styles and rails of specified width and panels of 2.5 mm thick veneer ply matching with wood used with grooves , pasted on both sides of 1" thick Lasani wood panel with tapered edges i/c the cost of tower bolt ,handles complete in all respect (Excluding the cost of chowkat frame,sliding bolt and lock) (iii) Oak Wood	Sft	403	2031.8		818815
68		WPC Doors					

PUBLIC PROCUREMENT REGULATORY AUTHORITY (PPRA) EPADS

Sr. No	Ref No.	Description	Unit	Quantity	Rate	Rate in Words	Amount
69	26-50	Providing and fixing 38mm (min) factory made Premium WPCProviding and fixing 38mm (min) factory made Premium WPC Doors (waterproof, Termite-resistant, Fire retardant) of ESTA, Greendoors or approved equivalent with WPC door frame (chowkat) and WPC architrave on both sides, including the cost of polishing, with hinges, T-lock, tower bolt, handle & all hardware's accessories complete in all respect as per approved specifications and as approved by the Engineer incharge. (WPC Door 8mm wall thickness)	Sft	189	3472.85		656369
70		Wooden Portal (Bulkhead)					

PUBLIC PROCUREMENT REGULATORY AUTHORITY (PPRA) EPADS

Sr. No	Ref No.	Description	Unit	Quantity	Rate	Rate in Words	Amount
71	11-48	Providing and fixing media wall / wall cladding of specified material and design, consisting of following over kail wood frame size 2-1/4"x1" @ 2' c/c fixed on polythene sheet on wall surface, i/c termite proofing and nails, glue etc, complete in all respect as approved by the Engineer incharge. 4 PVC Foam board Sheet 16-18mm thick	Per Sft	854	657.85		561804
72		Glass Works					
73		Glass Partition					

PUBLIC PROCUREMENT REGULATORY AUTHORITY (PPRA) EPADS

Sr. No	Ref No.	Description	Unit	Quantity	Rate	Rate in Words	Amount
74	25-56	Providing and fixing aluminium glazed partition of anodized / powder coated using section of M/s. Al-Cop/ Pakistan Cable or approved equivalent manufacturer, having 2 mm thick Frame size D48-A , i/c 12 mm Tempered glass edge polishing i/c the cost of tear resistance film,rubber gasket and hardware etc. complete in all respect as approved and directed by the Engineer Incharge.	Sft	1285	1534.3		1971576
75		Glass Doors					

PUBLIC PROCUREMENT REGULATORY AUTHORITY (PPRA) EPADS

Sr. No	Ref No.	Description	Unit	Quantity	Rate	Rate in Words	Amount
76	25-51	Providing and fixing all types of partly fixed and partly openable glazed anodised/ powder coated aluminium doors 1.6mm, using delux section of M/s Al-Cop or Pakistan Cables, having chowkat frame of size 40 x 100 mm (1½" x 4") and leaf frame of 60x40mm (2½"x1½") wide sections including the cost of specified thickness tempered glass with aluminium triangular gola and rubber gasket to support the glass and leaf edging, using approved standard fittings, locks, 3" (75 mm) wide long handles etc., and hardware any required as approved by the Engineer in-charge. (8mm thick Glass)	Sft	147	1825.9		268407
77		Aluminium Windows					

Sr. No	Ref No.	Description	Unit	Quantity	Rate	Rate in Words	Amount
78	25-52	Providing and fitting all types of glazed aluminium windows of anodised / powder coated partly fixed and partly sliding using delux sections of approved manufacturer having frame size of 100 x 30 mm (4"x1-1/4") and leaf frame sections of 50 x 20 mm (2"x¾"), all of 1.6mm 'thickness including 5 mm thick imported tinted glass with rubber gasket using approved standard latcheshardwareetc., as approved by the Engineer in-charge	Sft	46	1290.6		59368
79		False Ceiling					

PUBLIC PROCUREMENT REGULATORY AUTHORITY (PPRA) EPADS

Sr. No	Ref No.	Description	Unit	Quantity	Rate	Rate in Words	Amount
80	9-51	P/L false ceiling comprising of 5/8" thick plaster of paris sheet of required size in approved design with one line of 6" wide niche all around , hanging with Copper wire (16 SWG) duly enriched with POP and flaxen i/c the cost of making space for rope light/screws/jute/making holes for lights and rawal plugs complete in all respects as approved and directed by the Incharge.(Measurement will be made as per carpet Area).	Sft	4660	130.9		609994
81		WPC False Ceiling					

Sr. No	Ref No.	Description	Unit	Quantity	Rate	Rate in Words	Amount
82	9-53	Providing and fixing wall paneling of approved specified material / density / colour / texture, plain / grooved design having specified thickness / width, with inbuild Fluted / Rebated groves i/c cost of top bottom "U" channel gola and corner gola of same material i/c cost of steel nails, steel clamps, super glue, complete in all respect as approved by the Engineer Incharge. iii) WPC 6-18 mm thick	Sft	14874	449.95		6692556

PUBLIC PROCUREMENT REGULATORY AUTHORITY (PPRA) EPADS

Sr. No	Ref No.	Description	Unit	Quantity	Rate	Rate in Words	Amount
83	25-71	Providing and fixing imported 4mm thick Aluminum Composite Panel (ACP) Cladding with fire retarding core, fire rated, pvdf coating, aluminium profile skin front 0.5mm, rear 0.5mm, of approved colour and shade including aluminium brackets anchor bolts and nuts, aluminium profile, topping screw rod sponge and silicon filling of joints etc., complete in all respect as per approved specifications and as approved by the Engineer incharge	Sft	3195	1140.25		3643099
84		Glass Railing					

PUBLIC PROCUREMENT REGULATORY AUTHORITY (PPRA) EPADS

Sr. No	Ref No.	Description	Unit	Quantity	Rate	Rate in Words	Amount
85	25-56	Providing and fixing 2 ft 9 in (33 inches) high 12mm clear tempered glass railing system featuring smooth machine-polished edges, continuous or baluster SS 304 grade stainless steel pipe supports/posts with heavy base flanges, mechanical/chemical anchor bolts, on-site hoisting to higher floors, and installation labor. complete in all respects	Sft	479	1534.3		734930
86	10-20	Flag stone flooring in lime mortar 1:2, over ¾"(20 mm) bedding mortar, in platforms and floors, etc. (b) 3"(75 mm) thick	Sft	27000	230.2		6215400
87		CIVIL / ARCHITECTURAL WORKS					
88		Tile Floor					

PUBLIC PROCUREMENT REGULATORY AUTHORITY (PPRA) EPADS

Sr. No	Ref No.	Description	Unit	Quantity	Rate	Rate in Words	Amount
89	N.S.I	Providing and fixing imported Semi glazed full body AAA Quality approved Color and Shade with adhesive bond over 1/2"thick (1:2) cement plaster i/c the cost of sealer for finishing the joints i/c cutting grinding complete in all respects as approved and directed by the Engineer Incharge. Size 36" x 78".	Sft	11600	941		10915600
90		Bath Wall Tile					
91	N.S.I	Providing and fixing glazed full body AAA Quality matt finish approved Color and Shade with adhesive bond over 1/2"thick (1:2) cement plaster i/c the cost of sealer for finishing the joints i/c cutting grinding complete in all respects as approved and directed by the Engineer Incharge. Size 30" x 60".	Sft	6500	778		5057000
92		Suspended Ceiling					

Sr. No	Ref No.	Description	Unit	Quantity	Rate	Rate in Words	Amount
93	N.S.I	Supply, fabrication, and installation of suspended lightweight grid light-baffle ceiling structures (as per design drawings/renderings). The structure shall be constructed using 12mm lightweight MDF (L-MDF) . Surface finish to be completed with approved grey architectural concrete-textured spray paint / matt PU paint over primer coat. Complete with 2.0mm–3.0mm SS 304 aircraft wire suspension cables, adjustable brass clutch grippers, heavy-duty structural anchors fixed to roof trusses. complete in all respects and according to the detailed drawing.	Sft	631	1532		966692
94		Glass Curtain wall					

Sr. No	Ref No.	Description	Unit	Quantity	Rate	Rate in Words	Amount
95	N.S.I	Providing and fixing structural double-glazed curtain wall system featuring 8mm clear/tinted tempered glass on both sides (8mm + Air Gap/Spacer + 8mm IGU), continuous vertical mullions constructed with 2mm heavy-gauge aluminum curtain wall sections, clear anti-shatter safety film applied on the interior pane, complete structural silicone/EPDM sealant works, and hoisting/installation labor. and complete in all respects	Sft	7525	4956		37293900
96		M.S Stair From Ground Floor to F.Floor					

PUBLIC PROCUREMENT REGULATORY AUTHORITY (PPRA) EPADS

Sr. No	Ref No.	Description	Unit	Quantity	Rate	Rate in Words	Amount
97	N.S.I	Providing, fabricating & fixing M.S stair as designed by the Architect, including all required hardwares, arrangements etc. rust inhibiting prime coat and final finishing as approved. Complete in all respects.	Job	1	354000		354000
98		PUBLIC HEALTH WORKS					
99		PLUMBING FIXTURES					
100	19-3	Providing and fitting imported floor mounted Europeon coupled set of Water Closet (WC) and flushing Cistern of PORTA/ Marachi brand (full size) manufacturer i/c the cost of CP/rubber connection, thimble, seat cover and rawal bolts complete in all respects as approved and directed by the Engineer Incharge. Two Piece PORTA HD 200N Toilet Cito with Hydraulic Seat Cover					

PUBLIC PROCUREMENT REGULATORY AUTHORITY (PPRA) EPADS

Sr. No	Ref No.	Description	Unit	Quantity	Rate	Rate in Words	Amount
101		W.C with concealed cistern	Nos.	9	61651.1		554860
102	19-49	Providing and fixing CP bath Room Set made of Sonex/Master/Faisal or approved equvilent manufacturer, comprising of 3-No Tee stop cocks, lever type Basin Mixer, double Bib Cock, open wall shower, Muslim shower,waste coupling and bottle trap etc. complete in all respect as approved and directed by the Engineer incharge.					
103		i) 3 No Tee Stop Cock (set)	Nos.	9	2267		20403
104		ii) Lever Type Basin Mixer	Nos.	9	6707		60363
105		iii) Double Bib Cock	Nos.	9	1907		17163
106		iv) Open Type Wall Shower	Nos.	9	18707		168363
107		v) Muslim Shower	Nos.	9	2387		21483
108		(vi) Waste Coupling	Nos.	9	767		6903

PUBLIC PROCUREMENT REGULATORY AUTHORITY (PPRA) EPADS

Sr. No	Ref No.	Description	Unit	Quantity	Rate	Rate in Words	Amount
109	19-13	Providing and fixing, chromium plated soap dish.	Nos.	9	981.6		8834
110	19-15	Providing and fixing chromium plated toilet paper holder by Sonex/Master or equivalent approved by the Consultant, complete in all respects.	Nos.	9	1271.85		11447
111	19-55	Providing and fixing looking glass 6 mm thick Best quality i/c cost of edging of PVC or edge beveling 1.5" to 2.5" wide around glass. Complete in all respect as approved by the Engineer Incharge.	Sft.	109	702.05		76523
112	21-13	Providing and fixing 3" (75 mm) thick R.C.C. manhole cover, 22" (550 mm) dia, with tee shaped C.I. frame of 20" (500 mm) clear i/d (frame weighing 37.324 Kg. or one maund) as per Standard Drawing STD/PD No. 5, of 1977, complete in all respects.	Sft.	6	20955.4		125732

Sr. No	Ref No.	Description	Unit	Quantity	Rate	Rate in Words	Amount
113		Plumbing Works					
114		Internal Water Supply					
115	23-33	Providing, laying, testing and commissioning of POLYPROPYLENE RANDOM COPOLYMER (PPRC) water supply pipe (Dadex /Popular/ Beta or approved equivalent manufacturer, with specified pressure rating PN (PRESSURE NOMINAL)and conforming to DIN 8077-8078 code i/c cost of solvent, specials,making jharries complete in all respect as approved and directed by the Engineer Incharge. a) PN-16 pipe					
116		(ii) 25 mm	Rft	180	85.15		15327
117		(iii) 32 mm	Rft	270	129.15		34871
118		(iv) 40 mm	Rft	200	191.25		38250
119		(v) 50 mm	Rft	200	299.35		59870

PUBLIC PROCUREMENT REGULATORY AUTHORITY (PPRA) EPADS

Sr. No	Ref No.	Description	Unit	Quantity	Rate	Rate in Words	Amount
120		Sewerage Work					
121	19-44	Providing, laying, testing and commissioning µ-PVC (Un plasticized Polyvinyl Chloride) Pressure pipe of nominal diameter, conforming to PS-3051/BS-3505, Dadex/Popular / Beta or approved equivalent manufacturer, i/c the cost of solvent and specials complete. As approved and directed by the Engineer Incharge. a) Class-D					
122		(iii) 2"	Rft	100	242.25		24225
123		(iv) 3"	Rft	200	514		102800
124		(v) 4"	Rft	200	855.15		171030
125		(vi) 6"	Rft	700	1229.05		860335
126		Floor Trap					

PUBLIC PROCUREMENT REGULATORY AUTHORITY (PPRA) EPADS

Sr. No	Ref No.	Description	Unit	Quantity	Rate	Rate in Words	Amount
127	10-64	Providing and Fixing Floor trap jali 6"x6" stainless steel of 11-SWG Complete in all respect as approved and directed by the Engineer Incharge.	Nos.	9	1456.8		13111
128	N.S.I	3 Seater Sofa					
129		Providing & Placing approved quality/material 3 seater sofa. Complete in all respects as per site requirements and sample approved by competent authority.	Nos.	25	155760		3894000
130	N.S.I	Single Seater Sofa					
131		Providing & Placing approved quality/material single seater sofa. Complete in all respects as per site requirements and sample approved by competent authority.	Nos.	40	90000		3600000
132	N.S.I	Center Coffee Table					

Sr. No	Ref No.	Description	Unit	Quantity	Rate	Rate in Words	Amount
133		Providing & Placing approved quality/material center coffee table. Complete in all respects as per site requirements and sample approved by competent authority.	Nos.	9	72000		648000
134	N.S.I	Side Coffee Table					
135		Providing & Placing approved quality/material side coffee table. Complete in all respects as per site requirements and sample approved by competent authority.	Nos.	14	47200		660800
136	N.S.I	Visitor Chairs					
137		Providing & Placing approved quality/material visitor chairs. Complete in all respects as per site requirements and sample approved by competent authority.	Nos.	40	41300		1652000
138	N.S.I	Officer Chairs					

Sr. No	Ref No.	Description	Unit	Quantity	Rate	Rate in Words	Amount
139		Providing & Placing approved quality/material officer's chairs. Complete in all respects as per site requirements and sample approved by competent authority.	Nos.	23	53100		1221300
140	N.S.I	Executive Chairs					
141		Providing & Placing approved quality/material executive chairs. Complete in all respects as per site requirements and sample approved by competent authority.	Nos.	5	106200		531000
142	N.S.I	Executive Table					
143		Providing & Placing approved quality/material executive table. Complete in all respects as per site requirements and sample approved by competent authority.	Nos.	5	295000		1475000
144	N.S.I	Meeting Chairs					

Sr. No	Ref No.	Description	Unit	Quantity	Rate	Rate in Words	Amount
145		Providing & Placing approved quality/material meeting chairs. Complete in all respects as per site requirements and sample approved by competent authority.	Nos.	18	53100		955800
146	N.S.I	Meeting Table (18 Persons)					
147		Providing & Placing approved quality/material meeting table for 18 persons. Complete in all respects as per site requirements and sample approved by competent authority.	Nos.	1	708000		708000
148		E&M WORKS					
149	24-3 (a)	Supply and erection of PVC pipe for wiring recessed in walls, including inspection boxes, pull boxes, hooks, cutting jharries, and repairing surface, etc., complete with all specials					
150		iii) 25 mm i/d	Mtr	1000	459.75		459750

Sr. No	Ref No.	Description	Unit	Quantity	Rate	Rate in Words	Amount
151		v) 40 mm i/d	Mtr	100	646.25		64625
152		vi) 50 mm i/d	Mtr	50	793.65		39682.5
153	24-3 (b)	Supply and erection of PVC pipe for wiring, on surface i/c clamps, complete with all specials					
154		vii) 80 mm i/d	Mtr	100	888.5		88850
155		viii) 100 mm i/d	Mtr	75	1264.2		94815
156	24-8 (c)	Supply and erection of single core PVC insulated copper conductor cables, in prelaid PVC pipe/M.S. conduit/G.I pipe/wooden strip batten/wooden casing & capping/G.I. wire/trenches (rate for cables only). 450/750 volts, PVC insulated:					
157		i) 1 mm sq (1/0.029")	Mtr	750	113.05		84787.5
158		ii) 1.5 mm sq (3/0.029")	Mtr	2500	140.25		350625
159		iii) 2.5 mm sq (7/0.029")	Mtr	2000	207		414000
160		iv) 4 mm sq (7/0.036")	Mtr	2000	273.45		546900

Sr. No	Ref No.	Description	Unit	Quantity	Rate	Rate in Words	Amount
161		v) 6 mm sq (7/0.044")	Mtr	1500	378.45		567675
162		viii) 25 mm sq (19/0.052")	Mtr	150	1189.3		178395
163		xii) 95 mm sq (37/0.072")	Mtr	150	4107.3		616095
164	24-11 (c)	Supply and erection of PVC insulated PVC sheathed copper conductor cables for service connection, in prelaid pipe/G.I. wire/trenches, etc. (rate for cable only). PVC insulated, PVC sheathed 4 core, 600/1000 volt non armoured cable:					
165		v) 6 mm sq (7/0.044)	Mtr	90	1283.95		115555.5
166		ix) 35 mm sq (19/0.064)	Mtr	100	6469.8		646980
167		xiii) 120 mm sq (37/0.083)	Mtr	100	21357.8		2135780

PUBLIC PROCUREMENT REGULATORY AUTHORITY (PPRA) EPADS

Sr. No	Ref No.	Description	Unit	Quantity	Rate	Rate in Words	Amount
168	24-23	Supply and erection of bus bars, for 500 volts 3 phase A.C. supply with four copper bars, including glazed porcelain bridges, on angle iron board, fixed with rag bolts and M.S. sheet box 1.5 mm thick, etc. complete: v) 500 Amp with 4 copper size 2"x1/4" (50x6 mm)					
169		v) 500 Amp, 4 copper bars 2"x1/4"	No	1	9338.5		9338.5

PUBLIC PROCUREMENT REGULATORY AUTHORITY (PPRA) EPADS

Sr. No	Ref No.	Description	Unit	Quantity	Rate	Rate in Words	Amount
170	24-85 (a)	Supplying, installation and commissioning of MCB (Miniature Circuit Breaker) of specified rating made of LEGRAND FRANCE/GE U.S.A/SCHNEIDER GERMANY/SIEMENS GERMANY/TERASAKI JAPAN/ABB SWITZERLAND in prelaid DBs and Panels i/c the cost of screws, necessary wire complete in all respect as approved and directed by the Engineer Incharge. Single Pole					
171		iii) 6-63 Amp (10 KA)	Nos	60	1459.05		87543

PUBLIC PROCUREMENT REGULATORY AUTHORITY (PPRA) EPADS

Sr. No	Ref No.	Description	Unit	Quantity	Rate	Rate in Words	Amount
172	24-86	Supplying, installation and commissioning of MCCB (Moulded Case Circuit Breaker) of specified rating made of LEGRAND FRANCE/GE U.S.A/SCHNEIDER GERMANY/TERASAKI JAPAN/SIEMENS/ABB SWITZERLAND (with fixed Thermal-Magnetic Trip) in prelaid DBs and Panels i/c the cost of screws, necessary wire complete in all respect as approved and directed by the Engineer Incharge.					
173		(a) Triple Pole (i) 15-63 Amp (7.5 KA)	Nos	4	11722.95		46891.8
174		(a) Triple Pole (vii) 15-100 Amp (36 KA)	Nos	4	20329.2		81316.8
175		(b) Four Pole (ii) 125-250 Amp (18 KA)	Nos	2	32717.4		65434.8
176		(b) Four Pole (vi) 225-630 Amp (36 KA)	Nos	1	115890.9		115890.9

Sr. No	Ref No.	Description	Unit	Quantity	Rate	Rate in Words	Amount
177	24-90	P/F wall mounted DB (Distribution Board) made with 16SWG Sheet (Recessed/Surface mounted Type), powder coated paint, i/c the cost of Lock, Indication lights, Thimble, Copper Comb, Wiring, Neutral & Earth Bar, Door Earthing, Digital Voltmeter, Digital Ammeter, Volt Selector Switch, Ammeter selector switch, Current Transformers and Controls complete in all respect as approved and directed by the Engineer Incharge (Breakers will be paid separately). a) 6" deep					
178		(ii) 75~100A	Cft	26	18641.05		484667.3

PUBLIC PROCUREMENT REGULATORY AUTHORITY (PPRA) EPADS

Sr. No	Ref No.	Description	Unit	Quantity	Rate	Rate in Words	Amount
179	24-91	P/F floor mounted Electric Panel board of required depth and size, fabricated with 14SWG M.S sheet (Indoor/Outdoor Type), derusting, zinc phosphated, finish with electro static powder coating in approved colour i/c the cost of Lock, Indication lights, Brass glands, Neutral & Earth bar, Digital voltmeter/Ampmeter, Selector switches, Current Transformers, Controls, Channels, Copper busbars of specified capacity, Door Earthing, complete in all respects as approved and directed by the Engineer Incharge (Breakers will be paid separately). L.T Switchboards a) 2.50 Ft deep					
180		i) 250~600A	Cft	8.75	4772.65		41760.69

Sr. No	Ref No.	Description	Unit	Quantity	Rate	Rate in Words	Amount
181	24-92	P/F floor mounted ATS (Auto Transfer Switch) panel board, fabricated with 14SWG M.S sheet (Indoor Type) duly painted with 100 microns powder coated paint in approved colour, front access, extendable, insulation class 600 volts IP-44, incoming & outgoing connections from bottom with flexible copper cable suitable for 415 V AC, 3 phase 4 wire, 50 Hz TPN & E system, manual change over i/c the cost of Lock, Indication lights, Brass glands, Neutral & Earth bar, thimbles, Digital voltmeter/Ampmeter, Selector switch, Current transformers, Controls, Channels, Copper busbars of specified capacity, Relays, Door Earthing, complete in all respects as approved and directed by the Engineer Incharge (Breakers will be paid additionally). b) 2.00 Ft deep					

Sr. No	Ref No.	Description	Unit	Quantity	Rate	Rate in Words	Amount
182		i) 125-250 KVA	No	1	2349389.05		2349389.05
183	24-93	P/F PFI PLANT (Power Factor Improvement Plant) comprising of components of required ratings, in MS box of 14SWG i/c the cost of 3 mm thick Bakelite sheet (Safety Sheet), Lock, thimbles, power capacitors, Magnetic contactors, HRC fuses, Power factor controllers, Indication lights, Copper comb, Wiring, Neutral & Earth bar, Door earthing, brass glands, push buttons, CTs, Control MCB, Surge Suppressors, Auto/Manual Switches, Exhaust Fan, Temp regulators as per WAPDA standards complete in all respects as approved and directed by the Engineer Incharge.					
184		v) 300 KVAr	No	1	977725.25		977725.25

PUBLIC PROCUREMENT REGULATORY AUTHORITY (PPRA) EPADS

Sr. No	Ref No.	Description	Unit	Quantity	Rate	Rate in Words	Amount
185	24-102 (b)	Providing and fixing Pakistan Energy label NEECA approved Copper winded Exhaust fan i/c the cost of necessary cable and hardware for connection from ceiling rose complete as approved and directed by Engineer Incharge. Steel Body					
186		i) 12" sweep	Nos	6	5516.75		33100.5
187	24-103	Providing and fixing Pakistan Energy label NEECA approved Copper winded Wall Bracket Fan i/c the cost of necessary cable and hardware for connection as approved and directed by Engineer Incharge.					
188		i) 18" Sweep dia	Nos	20	6861.15		137223

PUBLIC PROCUREMENT REGULATORY AUTHORITY (PPRA) EPADS

Sr. No	Ref No.	Description	Unit	Quantity	Rate	Rate in Words	Amount
189	24-104	Providing and fixing Pakistan Energy label NEECA approved Copper winded Ceiling Fan i/c the cost of necessary cable and hardware for connection as approved and directed by Engineer Incharge.					
190		iii) 56" dia	Nos	1	10180.2		10180.2
191	24-106	Supply, installation, testing, commissioning of 16 SWG sheet steel powder coated back box with the earth terminal, recessed in wall, including accessories, complete in all respect as per specifications and as approved by the Engineer-in-charge					
192		i) Small 3x3 inch	Nos	215	438.8		94342
193		ii) Large 6x3 inch	Nos	30	702.8		21084

PUBLIC PROCUREMENT REGULATORY AUTHORITY (PPRA) EPADS

Sr. No	Ref No.	Description	Unit	Quantity	Rate	Rate in Words	Amount
194	24-105	P/F PVC double layer Switch kit Face plate with specified switch holes i/c the cost of switches/sockets/dimmer made of Hi-Life/Bush/Schneider, screws complete as approved and directed by the Engineer Incharge					
195		a) One way Gang Switch (Small) iv) Three pin Light Plug 10/13 Amp	Nos	120	754.45		90534
196		a) (Small) v) Telephone / TV / Data cable socket	Nos	70	662.45		46371.5
197		a) (Small) vi) Fan Dimmer	Nos	1	740.6		740.6
198		a) (Small) viii) Three Pin Power Plug 15-32 Amp	Nos	24	924.55		22189.2
199		b) One way Gang Switch (Large) i) 04 Gang	Nos	10	981.25		9812.5
200		b) (Large) iii) 06 Gang	Nos	20	1405.85		28117

Sr. No	Ref No.	Description	Unit	Quantity	Rate	Rate in Words	Amount
201	24-110 (c)	Supplying and erection of specified LED/SMD lights, conforming IP20, input voltage 165-265 AC volt, frequency 50/60Hz, life span 30000 Hrs, lumens minimum 110 lm/watt, PF 0.70 to 0.90, CRI > 80, color 6500k/4000k/3000k. Complete in all respect, as approved and directed by the Engineer Incharge. Panel Square Lights 2x2' 48 Watt					
202		Panel Square Lights 2x2' 48 Watt	Nos.	160	16495.25		2639240

PUBLIC PROCUREMENT REGULATORY AUTHORITY (PPRA) EPADS

Sr. No	Ref No.	Description	Unit	Quantity	Rate	Rate in Words	Amount
203	24-70 (a)	Supplying, installation and commissioning of LED Luminaries of specified wattage and lumens conforming to IP66 & IK 08 or above, Philips/Osram/Thorn or NEECA approved equivalent manufacturer with corrosion resistant die casted Aluminum housing, silicon gasket in special groove, F1 rated polycarbonate optic complete with LED Chip, programmable LED driver, minimum 10kV surge protection rating device i/c the cost of all accessories/components required for proper operation, bucket elevator charges as approved and directed by the Engineer Incharge.					
204		iv) 90 Watt with 12600 Lumens	Nos	24	41643.4		999441.6

PUBLIC PROCUREMENT REGULATORY AUTHORITY (PPRA) EPADS

Sr. No	Ref No.	Description	Unit	Quantity	Rate	Rate in Words	Amount
205	24-123	Supply, Installation and commissioning of wiring with 4-pair data Cable, 23 AWG UL/EN listed cable conforming to TIA/EIA 568 / ISO/IEC 11801, in prelaid conduit / cable tray including all accessories, Manufacturer/OEM Authorization, Make: Schneider / i-connect UK/3M Corning USA/D-Link/Pollo Australian or equivalent complete in all respect as approved and directed by Engineer Incharge. a) UTP (Unshielded Twisted pair) i. 23 AWG					
206		i) CAT-6 (Min. 1G @ 250MHz or higher)	Mtr	3000	161.4		484200

PUBLIC PROCUREMENT REGULATORY AUTHORITY (PPRA) EPADS

Sr. No	Ref No.	Description	Unit	Quantity	Rate	Rate in Words	Amount
207	Market Item	Providing & fixing of PVC/UPVC 16 x 38 mm Duct U shape with Cover best quality (make Popular or Adamjee) for Networking Complete as per site requirement & entire satisfaction of Engineer in charge.					
208			Mtr	200	300		60000
209	Market Item	Providing & fixing of PVC/UPVC 40 x 40 mm Duct U shape with Cover best quality (make Popular or Adamjee) for Networking Complete as per site requirement & entire satisfaction of Engineer in charge.					
210			Mtr	100	370		37000

PUBLIC PROCUREMENT REGULATORY AUTHORITY (PPRA) EPADS

Sr. No	Ref No.	Description	Unit	Quantity	Rate	Rate in Words	Amount
211	Market Item	Providing & fixing of Aqua FBRO Floor Box raised 12' x 12' having a capacity to accommodate 4 Nos Faceplates Complete as per site requirement & entire satisfaction of Engineer in charge.					
212			No	36	15500		558000
213	Market Item	P/F of M.S Ornamental Pole 18' Height Double Arm i/c J-Bolts, RCC Foundation, Imported High Class Deco Paint, Transportation, Loading, Unloading etc Complete in all respect as per entire satisfaction and instruction of Engineer in-Charge.					
214			Nos	12	120000		1440000

PUBLIC PROCUREMENT REGULATORY AUTHORITY (PPRA) EPADS

Sr. No	Ref No.	Description	Unit	Quantity	Rate	Rate in Words	Amount
215	Market Item	Providing/Installation of DC Inverter Type Heat & Cool Floor Standing Cabinet AC make Haier, LG or equivalent having Capacity 4 Ton complete with indoor & outdoor Bracket, aeroflex insulation, suitable size of copper pipes (any length/width), flexible copper conductor power cable, 1" dia uPVC pipe for drain and suitable size of PVC Duct inside and outside to cover the installation complete as per entire satisfaction and directed by Engineer Incharge.					
216			Nos	8	780000		6240000

PUBLIC PROCUREMENT REGULATORY AUTHORITY (PPRA) EPADS

Sr. No	Ref No.	Description	Unit	Quantity	Rate	Rate in Words	Amount
217	Market Item	Providing/Installation of DC Inverter Type Heat & Cool Floor Standing Cabinet AC make Haier, LG or equivalent having Capacity 2 Ton complete with indoor & outdoor Bracket, aeroflex insulation, suitable size of copper pipes (any length/width), flexible copper conductor power cable, 1" dia uPVC pipe for drain and suitable size of PVC Duct inside and outside to cover the installation complete as per entire satisfaction and directed by Engineer Incharge.					
218			Nos	11	345000		3795000

PUBLIC PROCUREMENT REGULATORY AUTHORITY (PPRA) EPADS

Sr. No	Ref No.	Description	Unit	Quantity	Rate	Rate in Words	Amount
219	Market Item	GENERATOR SET: Supply, installation, testing and commissioning of Diesel Engine Prime rating Generator in accordance with ISO3046, ISO-9001:2015, BS-5514, DIN-6271, AS-2789, 2014/3/EU electromagnetic compatibility and 2000/14/EC, noise emission for outdoor use. Engine and alternator mounted on robust skid frame including fuel tank, control panel, diesel engine four stroke, water cooled 1500 RPM, built in battery charger, batteries and brushless self-excited alternator, 400/230V, 3 phase and NL, 50 Hz, power factor 0.8, with Sound Proof canopy, (CBU) complete assembled, integrated/manufactured in EU, UK & USA. Engine make Caterpillar, Cummins or Perkins & Alternator made by Stamford or Equivalent 200 KVA as approved as directed by the Engineer Incharge.					

Sr. No	Ref No.	Description	Unit	Quantity	Rate	Rate in Words	Amount
220			No	1	13500000		13500000
221	Market Item	PASSENGER LIFT: Supply, installation, testing & commissioning of passengers lift with motor 415V, 3ph, AC, 50Hz supply, suitable to serve 02 floors, with AC Variable Voltage & Variable Frequency drive (VVVF), with Glass Door & complete with all standard accessories, for up to 630 Kg, including all applicable safeties complete in all respect as per drawing and specification, as latest edition of applicable standards of ANSI, ASME, BS/EN, AWS, NFPA, ASTM, NEMA and IEE etc. EU / China origin make Otis, Schindler or Kone or equivalent.					
222			Nos	1	10000000		10000000
						GRAND TOTAL:	Rs280,707,862.69

PROCUREMENT REGULATORY AUTHORITY PPRA EPADS

Scope of Work

As per BOQ attached.

Brief Description

The Capital Development Authority (CDA) intends to undertake the development works for the One Window Cell on an emergent basis to ensure efficient and effective delivery of public services. The project aims to provide various CDA services to the general public at a single, easily accessible location.

PUBLIC PROCUREMENT REGULATORY AUTHORITY (PPRA) EPADS

Price Schedule

For Individual Jobs

#	Job Title	Quantity	Unit Price (PKR)	Total Price (PKR)	Delivery Location	Delivery Period / Year	Country of Origin
1							
2							

For Lots

#	Lot Title	Total Lot Price (PKR)	Country of Origin
1	[Lot 1 Title]		

PUBLIC PROCUREMENT REGULATORY AUTHORITY
(PPRA)
EPADS

General Conditions of Contract

Red Book:
© FIDIC 2017. All rights reserved.

The Conditions of Contract are the “General Conditions” which form part of the “Conditions of Contract for Construction for Building and Engineering Works Designed by the Employer (“Red book”) Second edition 2017” published by the Federation Internationale Des Ingenieurs – Conseils (FIDIC) and the following “Particular Conditions” which shall complement the General Conditions of the Contract.

The successful Bidder, upon contract award, shall be required to furnish two (02) copies of aforementioned “General Conditions” for incorporation in the Works Contract.

International Federation of Consulting Engineers (FIDIC) FIDIC
Bookshop – Box- 311 – CH – 1215 Geneva 15, Switzerland
Fax: +41 22 799 49 054
Telephone: **+41 22 568 0500**
E-mail: **fidic@fidic.org**
Website: www.fidic.org
FIDIC code: ISBN13: 978-2-88432-084-9

PUBLIC PROCUREMENT REGULATORY AUTHORITY (PPRA) EPADS

Special Conditions of Contract

PARTICULAR CONDITIONS OF CONTRACT (PCC)

Particular Conditions
(Mandatory Provisions not to be amended/substituted)

The Particular Conditions (PCC) complement the General Conditions (GCC) to specify dates, contractual requirements, and special circumstances related to the Works. The PCC consists of two parts, Part A - Contract Data and Part B - Special Provisions. The provisions to be found in the Special Provisions (Particular Conditions - Part B) take precedence over the equivalent provisions found under the same Sub-Clause number(s) in the General Conditions, and the provisions of the Contract Data (Particular Conditions - Part A) take precedence over the Special Provisions (Particular Conditions - Part B).

PART A - Contract Data

Sub-Clause 1.1.27
Defects Notification Period (DNP): **365** Days

Sub-Clause 1.1.31
Employer's name & address: **Sector Development (Capital Development Authority), Deputy Director Room No 29, CDA Main Secretariat, Block No-III, First Floor, Sector G-7/4, Islamabad.**

Sub-Clause 1.1.35
Engineer's name & address: Concerned Member

CDA Main Secretariat, Executive Block, First Floor, Sector G-7/4, Islamabad

Sub-Clause 1.1.84
Time for Completion: **90** days for whole of the works

Sub-Clause 1.3 (a)(ii)
Agreed method of electronic transmission: Agreed
The Electronic Transmission Methods are Epads V 2.0

Sub-Clause 1.3 (d)
Address of Empoyer for Communications: **Room No 29, CDA Main Secretariat, Block No-III, First Floor, Sector G-7/4, Islamabad.**
Address of Engineer for Communications:

CDA Main Secretariat, Executive Block, First Floor, Sector G-7/4, Islamabad

Address of Contractor for Communications: ----------

Sub-Clause 1.4
Contract shall be governed by the law of: **Islamic Republic of Pakistan**
Ruling language: **English**
Language for communications: **English**

Sub-Clause 2.1
After receiving the Letter of Acceptance, the Contractor shall be given right of access to all or part of the Site within: **7** days after Commencement Date

Sub-Clause 2.4
Employer's financial arrangements:

Self Finance

Sub-Clause 3.2 (e)(ii)
Engineer's Duties and Authority: **Variation resulting in an increase of the Accepted Contract Amount in excess ofone percent (1%)subject to accumulative Variations not exceeding five percent (5%)of the Accepted Contract Amount**

Sub-Clause 4.2
Performance Security (as percentage of the Accepted Contract Amount in Currencies): 3.00%
Form of Performance Guarantee: **Bank Guarantee**

Sub-Clause 4.2.1
List of Insurance Companies:

Only NICL

Sub-Clause 4.7.2
period for notification of errors in the items of reference: **Twenty Eight (28) days**

Sub-Clause 4.19
Period of payment for temporary utilities: **Each Month**

Sub-Clause 5.1 (a)
Maximum allowable accumulated value of work subcontracted (as a percentage of the Accepted Contract Amount): **Nil** %

Sub-Clause 5.1 (b)
Parts of the Works for which subcontracting is not permitted: Nil

Sub-Clause 6.5
Normal working hours on the Site: **8**

Sub-Clause 8.3
Number of additional paper copies of programmes: **3**

Sub-Clause 8.8 & 14.15(b)
Delay Damages payable for each day of delay **0.10**% of the Accepted Contract Amountfor delay in completion of whole of the Works

Sub-Clause 8.8
Maximum amount of Delay Damages **10.00 %** of the Accepted Contract Amount

Sub-Clause 8.14
Applicability of Incentives for Early Completion **No**

Sub-Clause 12.3
Percentage profit (Not more than 10%): **Nil**

Sub-Clause 13.4.(b)(ii)
Percentage rate to be applied to Provisional Sums for overhead charges and profit: **Twenty Five percent (25%)**

Sub-Clause 14.2
Total Advance Payment: **Fifteen percent (15%) of the Accepted Contract Amount excluding Provisional Sums payable in the currencies and proportions in which the Accepted Contract Amount is payable**

Sub-Clause 14.2.1
Advance Payment Insurance **Not Allowed**

Sub-Clause 14.2.3
Percentage deductions for the repayment of the Advance Payment: Deduction shall be made at the amortization rate of 17.5 % of the value of the Works executed of each IPC as provided in paragraph (i) of Sub-Clause GCC 14.3, starting from 2nd IPC provided that the advance payment shall be completely repaid prior to the time when 90% of the Accepted Contract Amount less Provisional Sums has been certified for payment. It may be more than 17.5% in the last instalment to ensure full repayment.

Sub-Clause 14.3
Period of payment **One Month**

Sub-Clause 14.3(b)
Number of additional paper copies of Statements: **3**

Sub-Clause 14.3 (iii)
Percentage of retention: **Seven percent (7%)**

Sub-Clause 14.3 (iii)
Limit of Retention Money (as a percentage of the Accepted Contract Amount): **Five percent (5%)**

Sub-Clause 14.5(b)(i)
Plant and Materials for payment when shipped: **Plant and Materials under Bill of "Imported Plant and Materials"**

Sub-Clause 14.5(c)(i)
Plant and Materials for payment when delivered to the Site: Plant and Non Perishable Materials

Sub-Clause 14.6.2
Minimum amount of Interim Payment Certificate (IPC): **Yes**
The Minimum Amount IPC is 18 Million
[Employer to give value not exceeding one fifth of the average expected value of Interim Payment Certificate]

Sub-Clause 14.7(a)
Period of payment of Advance Payment to the Contractor**: 14 days**

Sub-Clause 14.7b(i)
Period for the Employer to make interim payments to the Contractor under Sub-Clause 14.6: **28** days

Sub-Clause 14.7b(ii)
Period for the Employer to make interim payments to the Contractor under Sub-Clause 14.13 (Final Payment)**: 28** days

Sub-Clause 14.7(c)
Period for the Employer to make final payment to the Contractor**: 56** days

Sub-Clause 14.8
Financing charges for delayed payment Local Currency (PKR):

6-Month KIBOR (Offer) +3% per annum.
Foreign Currency:
USD
6-Month SOFR (Secured Overnight Financing Rate for USD) +1% per annum.

EURO
6-Month EURIBOR (EURO Interbank Offered Rate for EURO) +1% per annum.

Others
Appropriate rates +1% (for other foreign currencies, Ref. Schedule-A, A-4 to Bid).

Sub-Clause 14.11.1(b)
Number of additional paper copies of draft Final Statements**: 3**
[insert number of copies say six (06)]

Sub-Clause 14.15
Currencies of payment of Contract Price: **as stated in the Table Schedule of Adjustment Data of Schedule A (if Given)**

Sub-Clause 14.15(a)(i)
Proportions or amounts of Local and Foreign currencies: **as stated in the Table Schedule of Adjustment Data of Schedule A (if Given)**

Sub-Clause 14.15(c)
Currencies and proportions for payment of Delay Damages: **as stated in the Table Schedule of Adjustment Data of Schedule A (if Given)**

Sub-Clause 14.15(f)
rates of exchange: **as stated in the Table IV of Schedule A (If Given)**

Sub-Clause 17.2(d)
Forces of nature, the risks of which are allocated to the Contractor: **Nil**

Sub-Clause 19.1
Permitted deductible limits:
i) insurance required for the Works: **Ten percent (10%) of loss amount on each & every loss**
ii) insurance required for Goods: **Nil**
iii) insurance required for liability for breach of professional duty: **Nil**
iv) insurance required against liability for fitness for purpose (if any is required): **Nil**
v) insurance required for injury to persons and damage to property: **Nil**
vi) insurance required for injury to employees: **Nil**
vii) other insurances required by Laws and by local practice : **Nil**

Periods for submission of insurance:
a) evidence of insurance: Not later than the Commencement Date
b) relevant policies: Within twenty eight (28) day from the Commencement Date

Sub-Clause 19.2.1(b)
Additional amount to be insured (as a percentage of the replacement value): 15% of the replacement value (Accepted Contract Amount)
Sub-Clause 19.2.2
Extent of insurance required for Goods: From Ex-Works (i.e., works, factory, warehouse, etc) to delivery at the Site
Amount of insurance required for Goods: Full replacement value

Sub-Clause 19.2.3(a)
Amount of insurance required for liability for breach of professional duty: Full replacement value of the Works to be designed by the Contractor

Sub-Clause 19.2.3(b)
Insurance required against liability for fitness for purpose: **Yes**

Sub-Clause 19.2.3
Period of insurance required for liability for breach of professional duty: Until the date of issuance of Performance Certificate

Sub-Clause 19.2.4
Amount of insurance required for injury to persons and damage to property: Injury to person and Fatal case: in accordance with Workmen Compensation Act
Damage to Property: The Amount of Insurance Required for Person Injury is 2000000
The Amount of Insurance Required for Damage to Property is 5000000 as per his assessment of the adjoining property(ies) other than the Works]
without limit to the number of incidents

Sub-Clause 19.2.6
Other insurances required by Laws and by local practice: All insurances as applicable, to the extent of execution of the project, under Federal and Provincial laws of Islamic Republic of Pakistan

Sub-Clause 21.1
Time for appointment of the DAAB: Within 28 days from the Commencement Date.
In case the Accepted Contract Amount is lesser than PKR one (01) billion, appointment of the DAAB shall be made when Dispute arises between the Parties.

Sub-Clause 21.1
The DAAB shall comprise 1
[insert either “a sole Member” or “Three Members”]
[For a Contract estimated to cost above PKR 2.5billion, the DAAB shall comprise of three members. For a Contract estimated to cost between PKR1billion and PKR2.5billion, the DAAB may comprise of three members or a sole member. For a Contract estimated to cost less than PKR1billion, a sole member is recommended.]

Sub-Clause 21.1
List of proposed members of DAAB
- proposed by Employer

Not required in subject case

- proposed by Contractor
[to be inserted at the time of signing of the Contract]
1._____
2._____
3._____

Sub-Clause 21.2
Appointing entity (official) for DAAB members Managing Director Public Procurement Regulatory Authority (PPRA) or Chairman Pakistan Engineering Council (PEC) from the list of PEC approved arbitrators published at its website

Sub-Clause 21.6
Rules of Arbitration: PEC Rules of Conciliation and Arbitration or Pakistan Arbitration Act of 1940, if the former is inactive.
The place of Arbitration shall be in the Employer's country: **Islamabad**
[Insert name of city]

Particular Conditions

PartB - Special Provisions

1.1 Definitions

1.1.76 "Specification"
Following is added at the end:
"and consists of two parts i.e.,
i) "Part A - Specific Provisions"; and
ii) "Part B - Technical Provisions"."

1.2 Interpretation

"and" is deleted from the end of sub-paragraph (i) and added at the end of sub-paragraph (j).
Sub-paragraph (k) is added:
"(k) The word "tender" is synonymous with "bid" the word tenderer with "bidder", the words "tender documents" with "bidding documents" and "Schedule of Prices" with "Bill of Quantities", as applicable."

1.5 Priority of Documents

The documents listed at (a) through (k) of this Sub-Clause are deleted and substituted with the following:
(a) the Contract Agreement;
(b) the Letter of Acceptance;
(c) the Letter of Bid;
(d) the Particular Conditions Part A - Contract Data;
(e) the Particular Conditions Part B - SpecialProvisions;
(f) the General Conditions;
(g) the Specification Part A - SpecificProvisions;
(h) the Specification Part B- Technical Provisions;
(i) the Drawings;
(j) the completed Schedules to Bid includingBillof Quantities;
(k) the JV Undertaking (if the Contractor is a JV); and
(l) any other documents forming part of the Contract.
The addenda/corrigenda, if any, shall be deemed to have been incorporated at the appropriate places in the documents forming the Contract.

1.6 Contract Agreement

In the last line of the 1st paragraph the text "shall be borne by the Employer" is substituted by" shall be reimbursed by the Employer to the Contractor".

3.1 The Engineer

In sub-paragraph (a) the text “as defined in the Pakistan Engineering Council Act, 1975 (Act No.V of 1976)” are added after the words “professional engineer”.

3.2 Engineer’s Duties and Authority

The Engineer shall obtain the consent in writing of the Employer before taking action under the following Sub-Clauses of these Conditions:
(a) Consenting to the subcontracting of any part of the Works under Sub-Clause 5.1 [Subcontractors]
(b) Any action under Sub-Clauses 8.9 [Employer’s Suspension] and 8.12 [Prolonged Suspension]
(c) Issuance of “Taking Over Certificate” under Sub-Clause 10.1 [Taking Over the Works and Sections].
(d) Issuing the “Performance Certificate” under Sub-Clause 11.9 [Performance Certificate].
(e) Sub-Clause 13.1 [Right to Vary]: instructing a Variation, except;
(i) in an emergency situation as determined by the Engineer, or
(ii) if such a Variation would increase the Accepted Contract Amount by less than the percentage specified in the Contract Data.
(f) Sub-Clause 13.3 [Variation Procedure]: approving a proposal for Variation submitted by the Contractor in accordance with Sub-Clause 13.3.2 [Variation by Request for Proposal] or 13.2 [Value Engineering].
(g) Certifying release of second half of the Retention Money under Sub-Clause 14.9 [Release of Retention Money].
(h) Issuing Final Payment Certificate under Sub-Clause 14.13 [Issue of FPC].
(i)
*[insert Sub-Clause number (not Sub-Clause 3.7 [Agreement or Determination]
Any such requirement shall not be applied to any action by the Engineer under Sub-Clause 3.7 [Agreement or Determination], as stated in Sub-Clause 3.2 [Engineer’s Duties and Authority] of the General Conditions.
Notwithstanding the obligation, as set out above, to obtain approval, if, in the opinion of the Engineer, an emergency occurs affecting the safety of life or of the Works or of adjoining property, he may, without relieving the Contractor of any of his duties and responsibility under the Contract, instruct the Contractor to execute all such work or to do all such things as may, in the opinion of the Engineer, be necessary to abate or reduce the risk. The Contractor shall forthwith comply, despite the absence of approval of the Employer, with any such instruction of the Engineer. The Engineer shall determine an addition to the Contract Price, in respect of such instruction, in accordance with Clause 13 and shall notify the Contractor accordingly, with a copy to the Employer.
Following is added after the words “the Employer’s consent is required” in 4th paragraph:
“stating that the Employer’s consent has been obtained for that specified authority”

4.2 Performance Security

4.2.1 Contractor’s Obligations
The entity issuing the Performance Security and its form shall be as under:
The Performance Security shall be, at the option of the Contractor,issuedin the prescribed form included in the Bidding Documents,by(a) a Scheduled Bank in Pakistan or (b) a foreign bank duly counter-guaranteed by a Scheduled Bank in Pakistan or (c)an Insurance Companylisted in the Contract Data and rated by PACRA/VIS ofratingas provided in Table below:
Accepted Contract Amount (In Eq. PKR million) Minimum Rating of Insurance Companies
Up to 1000 A (+)
1001 to no limit AA
In case of Joint Venture, the Performance Security shall be in the name of the Joint Venture or in the name of Lead/either firm of the JV or in ratio of shares of the individual JV partners.
Following paragraph is added at the end of this Sub-Clause:
“The amount of Performance Security shall be reducedto 50%following issue of the Taking-Over Certificate for the whole of the Works under Clause 10 of Conditions of Contract.”

4.3 Contractor’s Representative

In second paragraphthe text “professional engineer as defined in the Pakistan Engineering Council Act, 1975 (Act No. V of 1976) (having temporary licence in case of foreign engineer under Section 12 of the Pakistan Engineering Council Act, 1975 (Act No. V of 1976)” are added after the words “qualified, experienced”.
In the 3rd paragraph the words “28 days” are substituted by “14 days”. In 2nd line of 4thparagraph the text “or appoint a replacement” is substituted by “except appointment of a suitable temporary replacement is deployed at the Site”

4.4 Contractor’s Documents

4.4.2 As-Built Records
First paragraph is deleted and the text in the last paragraph is substituted with the following:
“The Contractor shall furnish to the Engineer 6 copies, one reproducible and one electronic copy(provided the Engineer has made available to the Contractor editable form of the Drawings)of all Drawings amended to conform to the Works as built.In case the Engineer does not make available to the Contractor editable form of the Drawings, the Contractor shall furnish to the Engineer as-built data for incorporation in the Drawings. Upon receipt of PDF versions of the as-built drawings prepared by the Engineer, the Contractor shall furnish to the Engineer 6copies and one reproducible of these Drawings.
The price of such Drawings shall be deemed to be included in the Contract Price.”
Following Sub-Clause is added:
4.4.4 ShopDrawings
The Contractor shall submit to the Engineer for review 3 copies of all shop and erection drawings applicable to this Contract as per provision of relevant Sub-Clause of the Contract.
Review and approval by the Engineer shall not exceed 21 days and be construed as a complete check but will indicate only that the general method of construction and detailing is satisfactory and the Engineer’s review or approval shall not relieve the Contractor of any of his responsibilities under the Contract.

4.8 Health and Safety Obligations

The following text is added at the end ofthis Sub-Clause:
In the event of work being carried out outside the normal working hours and in the event of work being carried out at night, the Contractor shall at his own cost, provide and maintain such good and sufficient light as will enable the work to proceed satisfactorily and without danger. The approaches to the Site and the Works where the night work is being carried out shall be sufficiently lighted. All arrangement adopted for such lighting shall be to the satisfaction of the Engineer.

4.20 Progress Reports

At the end of sub-paragraph (g) the word “and” is deleted and at the end of sub-paragraph (h) the full stop (.) is replaced with “;”, and the following new sub-paragraphs are added as:
(i) planned programme for the execution of the Works for next 56 days to enable the Engineer to determine its programme of inspection and testing;
(j) monthly summery of daily job record indicating weather conditions, deployment of Contractor’s Equipment, labour employment, local material procurement and material import, if any; and
(k) salient contractual and project information.

5.1 Subcontractors

Add the following text at the end of paragraph (ii):
“underSchedule to Bid”
The following is added at the end of the last paragraph of Sub-Clause 5.1:
“All subcontracts relating to the Works shall include provisions which entitle the Employer to require the subcontract to be assigned to the Employer under sub-paragraph (a) of Sub-Clause 15.2.3 [After Termination].
The Contractor shall give reasonable opportunity to contractors from Islamic Republic of Pakistan for

subcontracts for the Works, and endeavour to employ such contractors as Subcontractors."

5.2 Nominated Subcontractors

5.2.2 Objection to Nomination
In sub-paragraph (c), "and" is deleted from the end of (i);
"." at the end of (ii) is replaced with: ", and".
The following is then added as (iii):
"(iii) be paid only if and when the Contractor has received from the Employer payments for sums due under the Subcontract referred to under Sub-Clause 5.2.3 [Payment to nominated Subcontractors]."

6.1 Engagement of Staff and Labour

The following paragraph is added at the end of the Sub-Clause:
"The Contractor shall, to the extent practicable and reasonable, employ staff (not less than 50%) and labour (not less than 85%) with appropriate qualifications and experience from sources within the Islamic Republic of Pakistan."

6.7 Health and Safety of Personnel

The existing text is substituted with the following:
"In order to provide for the safety, health and welfare of persons, and for prevention of damage of any kind, all operations for the purposes of or in connection with the Contract shall be carried out in compliance with the Safety Requirements of the Government of Pakistan with such modifications thereto as the Engineer may authorize or direct and the Contractor shall take or cause to be taken such further measures and comply with such further requirements as the Engineer may determine to be reasonably necessary for such purpose. The Contractor shall also provide all other medical services and appoint a health and safety officer at Site if stated in the Specifications. In case of any fatality or serious accident, the Contractor shall, in addition, notify the Engineer immediately by the quickest available means."

6.8 Contractor's Superintendence

Insert at the end of sub-paragraph (a) of this Sub-Clause:
"or, if not, the Contractor shall make competent interpreters available during all working hours, in a number sufficient for those persons to properly perform their superintendence duties"
The following text is added at the end of this Sub-Clause:
"The Contractor's authorized representative and his other engineers working at site shall possess valid registration with the Pakistan Engineering Council.
The Contractor's authorized representative at Site shall be authorized to exercise adequate administrative and financial powers on behalf of the Contractor so as to achieve completion of the Works as per the Contract."

6.12 Key Personnel

The following is inserted at the end of the last paragraph:
"If any of the Key Personnel are not fluent in this language, the Contractor shall make competent interpreters available during all working hours in a number deemed sufficient by the Engineer."
The following Sub-Clauses 6.13 to 6.26 are added at the end of Sub-Clause 6.12:

6.13 Foreign Personnel

The Contractor may bring in to the Country any foreign personnel who are necessary for the execution of the Works to the extent allowed by the applicable Laws. The Contractor shall ensure that these personnel are provided with the required residence visas and work permits. The Employer will, if requested by the Contractor, use all reasonable endeavours in a timely and expeditious manner to assist the Contractor in

obtaining any local, state, national, or government permission required for bringing in the Contractor's personnel.
The Contractor shall be responsible for the return of these personnel to the place where they were recruited or to their domicile. In the event of the death in the Country of any of these personnel or members of their families, the Contractor shall similarly be responsible for making the appropriate arrangements for their return or burial.

6.14 Supply of Foodstuffs

The Contractor shall arrange for the provision of a sufficient supply of suitable food as may be stated in the Specification at reasonable prices for the Contractor's Personnel for the purposes of or in connection with the Contract.

6.15 Supply of Water

The Contractor shall, having regard to local conditions, provide on the Site an adequate supply of drinking and other water for the use of the Contractor's Personnel.

6.16 Measures against Insect and Pest Nuisance

The Contractor shall at all times take the necessary precautions to protect the Contractor's Personnel employed on the Site from insect and pest nuisance, and to reduce the danger to their health. The Contractor shall comply with all the regulations of the local health authorities, including use of appropriate insecticide.

6.17 Alcoholic Liquor or Drugs

The Contractor shall not, otherwise than in accordance with the Laws of the Country, import, sell, give, barter or otherwise dispose of any alcoholic liquor or drugs, or permit or allow importation, sale, gift, barter or disposal thereto by Contractor's Personnel.

6.18 Arms and Ammunition

The Contractor shall not give, barter, or otherwise dispose of, to any person, any arms or ammunition of any kind, or allow Contractor's Personnel to do so.

6.19 Festivals and Religious Customs

The Contractor shall respect the Country's recognized festivals, days of rest and religious or other customs.

6.20 Funeral Arrangements

The Contractor shall be responsible, to the extent required by local regulations, for making any funeral arrangements for any of its local employees who may die while engaged upon the Works.

6.21 Forced Labour

The Contractor, including its Subcontractors, shall not employ or engage forced labour which consists of any work or service, not voluntarily performed, that is exacted from an individual under threat of force or penalty, and includes any kind of involuntary or compulsory labour, such as indentured labour, bonded labour or similar labour-contracting arrangements.

6.22 Child Labour

The Contractor, including its Subcontractors, shall not employ or engage child labour in accordance with relevant law(s) in force in Islamic Republic of Pakistan.

6.23 Employment Records of Workers

The Contractor shall keep complete and accurate records of the employment of labour at the Site. The records shall include the names, ages, genders, hours worked and wages paid to all workers. These records shall be summarized on a monthly basis and submitted to the Engineer. These records shall be included in the details to be submitted by the Contractor under Sub-Clause 6.10 [Contractor's Records].

6.24 Workers' Organizations

The Contractor shall comply with the relevant labour laws of Pakistan which recognize workers' rights to form and to join workers' organizations/Trade Union of their choosing and to bargain collectively without interference.

6.25 Non-Discrimination and Equal Opportunity

The Contractor shall not make decisions relating to the employment or treatment of Contractor's Personnel on the basis of personal characteristics unrelated to inherent job requirements. The Contractor shall base the employment of Contractor's Personnel on the principle of equal opportunity and fair treatment, and shall not discriminate with respect to any aspects of the employment relationship, including recruitment and hiring, compensation (including wages and benefits), working conditions and terms of employment, access to training, job assignment, promotion, termination of employment or retirement, and disciplinary practices.
Special measures of protection or assistance to remedy past discrimination or selection for a particular job based on the inherent requirements of the job shall not be deemed discrimination. The Contractor shall provide protection and assistance as necessary to ensure nondiscrimination and equal opportunity, including for specific groups such as women, persons with disabilities, migrant workers and children (of working age in accordance with Sub-Clause 6.22).

6.26 Epidemics

In the event of any out-break of illness of epidemic nature, the Contractor shall comply with and carry out such regulations, orders and requirements as may be made by the Government or the local medical or sanitary authorities for the purpose of overcoming the same.

7.7 Ownership of Plant and Materials

The following is added before the first paragraph:
"Except as otherwise provided in the Contract,"
The following is added at the end of the Sub-Clause:
"No Plant and/or Materials that is the property of the Employer shallbe removed from the Site. If it becomes necessary to:
(i) remove any item of such Plant from the Site for the purposesof repair, the Contractor shall give a Notice, with reasons, tothe Engineer requesting consent to remove the defective ordamaged item off the Site. This Notice shall clearly identifythe item of defective or damaged Plant, and shall give detailsof: the defect or damage to be repaired; the place to whichdefective or damaged item of Plant is to be taken for repair;the transportation to be used (and insurance cover for suchtransportation); the proposed inspections and testing off theSite; and the planned duration required before the repaireditem of Plant shall be returned to the Site. The Contractorshall also provide any further details that the Employer mayreasonably require; or
(ii) replace any item(s) of such Plant and/or Materials, theContractor shall give a Notice, with reasons, to the Engineerclearly identifying the item(s) of Plant and/or Materials to bereplaced, and giving details of the due date of delivery tothe Site of the replacement item(s).
Where any item of Plant and/or Materials has become the propertyof the Employer under this Sub-Clause before it has been deliveredto the Site, the Contractor shall ensure that such an item is notmoved except for its delivery to the Site.
The Contractor shall indemnify and hold the Employer harmlessagainst and from the consequences of any

defect in title orencumbrance or charge (except any reasonable restrictionarising from the intellectual property rights of the manufacturer orproducer) on any item of Plant and/or Materials that has becomethe property of the Employer under this Sub-Clause."
The following Sub-Clause7.9 is added after Sub Clause 7.8:

7.9 Use of Pakistani Materials and Services

The Contractor shall, so far as may be consistent with the Contract, make the maximum use of materials, supplies, plant and equipment indigenous to or produced or fabricated in Pakistan and services available in Pakistan provided such materials, supplies, plant, equipment and services shall be of required standard.

8.1 Commencement of Works

The following is added before the first paragraph:
“After signing of the Contract Agreement by both Parties,” and thereafter the word “The” is replaced with the word “the”.

8.5 Extension of Time for Completion

The following is added after paragraph (c):
“for last five years”.
The following Sub-Clause 8.14 is added after Sub-Clause 8.13:

8.14 Incentives For Early Completion

If Contract Data does not state applicability of incentives for early completion, this Sub-Clause shall not apply.
The Contractor shall be entitled subject to Sub-Clause 20.2 [Claims for Payment and/or EOT] to bonus payment if the Works and/or each Section is completed earlier than the Time for Completion for the Works or Section (as the case may be). The amount of bonus for early completion of the Works and/or each Section shall be upto a limit and at a rate to 50% of the relevant limit and rate of delay damages prescribed in Contract Data and shall be paid for every day which shall elapse between the relevant Date of Completion of the Works or Section and the relevant Time for Completion.
For the purposes of calculating any bonus payment, the applicableTime for Completion stated in the Contract Data is fixed and noadjustments of this time by reason of granting an EOT will beallowed.
The following Sub-Clause 11.12 is added after Sub-Clause 11.11:

11.12 Supervisory Assistance During DNP

If provided under the Schedule of Prices, the Contractor shall provide supervisory assistance to the Employer during the DNP for the Works. Such supervisory assistance shall be as described in the Specification for the purpose of supporting the Employer's operation and maintenance of the Plant for the period specified in the Schedule of Prices after the Date of Completion.

12.2 Method of Measurement

The following paragraph is added at the end of the Sub-Clause:
“Summary of measured quantity for payment shall be delineated item-wise under four headsnamely; “Schedule of Prices Quantity”, “Quantity Executed To-date”, “Quantity Certified Previously” and “Net Quantity Executed under this Certificate”.

12.3 Valuation of the Works

The following text is added at the end of fifth paragraph of the Sub-Clause:
“Sum of overhead charges and profit for sub-paragraph (a) shall be Twenty Five percent (25%)”.

13.4 Provisional Sums

The following paragraph is inserted as the penultimate paragraph:
“The Provisional Sum shall be used to cover the Employer’s share of the DAAB members’ fees and expenses, in accordance with Clause 21. No prior instruction of the Engineer shall be required with respect to the work of the DAAB. The Contractor shall submit the DAAB members’ invoices and the satisfactory evidence of having paid 100% of such invoices as part of the substantiation of those Statements submitted under Sub-Clause 14.3.

13.6 Adjustments for Changes in Laws

The following paragraphsare added at the end of the Sub-Clause:
“Notwithstanding the foregoing, the Contractor shall not be entitled to an extension of time if the relevant delay has already been taken into account in the determination of a previous extension of time and such Cost shall not be separately paid if the same shall already have been taken into account in the indexing of any inputs to the Table of Adjustment Data in accordance with the provisions of Sub-Clause 13.7 [Adjustments for Changes in Cost].”

14.1 The Contract Price

The following is added at the end of the Sub-Clause:
“Notwithstanding the provisions of subparagraph (b), Contractor's Equipment, including essential spare parts, imported by the Contractor for the sole purpose of executing the Contract shall be temporarily exempt from the payment of import duties and taxes upon initial importation, provided the Contractor shall post with the customs authorities at the port of entry an approved re-export bond or bank guarantee, valid until the Time for Completion plus six months, in an amount equal to the full import duties and taxes which would be payable on the assessed imported value of such Contractor's Equipment and spare parts, and callable in the event the Contractor's Equipment is not re-exported from the Country on completion of the Contract. A copy of the bond or bank guarantee endorsed by the customs authorities shall be provided by the Contractor to the Employer upon the importation of individual items of Contractor's Equipment and spare parts. Upon re-export of individual items of Contractor's Equipment or spare parts, or upon the completion of the Contract, the Contractor shall prepare, for approval by the customs authorities, an assessment of the residual value of the Contractor's Equipment and spare part to be re-exported, based on the depreciation scale(s) and other criteria used by the customs authorities for such purposes under the provisions of the applicable Laws. Import duties and taxes shall be due and payable to the customs authorities by the Contractor on (a) the difference between the initial imported value and the residual value of the Contractor's Equipment and spare parts to re-exported; and (b) on the initial imported value of the Contractor's Equipment and spare parts remaining in the Country after completion of the Contract. Upon payment of such dues within 28 days of being invoiced, the bond or bank guarantee shall be reduced or released accordingly; otherwise the security shall be called in the full amount remaining.”
[The Employer may change or delete this Sub-Clause as per Project requirements]

14.2 Advance Payment

14.2.1 Advance Payment Guarantee
The entity issuing the Advance PaymentGuaranteeand its form shall be as under:
The Advance PaymentGuarantee shall be in the form of Guarantee issued by (a) a Scheduled Bank in Pakistan or (b) a foreign bank duly counter-guaranteed by a Scheduled Bank in Pakistanor (c)an Insurance Companylisted in the Contract Data and rated by PACRA/VIS ofrating as provided in Table below:
Accepted Contract Amount (In Eq. million PKR) Minimum Rating of Insurance Companies
Up to 1000 A (+)

1001 to no limit AA
In case of Joint Venture, the Advance PaymentGuarantee(s)shall be in the name of the Joint Venture or in the name of Lead/either firm of the JV or in ratio of shares of the individual JV partners.

14.6 Issue of IPC

14.6.1 The IPC
In the first line of the 1st paragraph the words “28 days” are substituted by “14 days”.

14.7 Payment

The words “or through crossed cheque in favour of the Contractor or JV partners. The Payment to JV partners shall be made at the request of the Joint Ventures in the ratio of their shares specified by them” are added at the end of the Sub-Clause.

14.8 Delayed Payment

In the first paragraph, third line, the words “compounded monthly” are deleted.
The text of 2nd paragraph is deleted and substituted with the following:
“The Employer shall pay to the Contractor compensation at the rate stated in the Contract Data.”

14.9 Release of Retention Money

The following is added at the end of Sub-Clause 14.9:
“Unless otherwise stated in the Contract, when the Taking-Over Certificate has been issued for the Works and the first half of the Retention Money has been certified for payment by the Engineer, the Contractor shall be entitled to substitute a guarantee, in the form annexed to the Particular Conditions or in another form approved by the Employer and issued by a schedule bank selected by the Contractor, for the second half of the Retention Money. The Contractor shall ensure that the guarantee is in the amounts and currencies of the second half of the Retention Money and is valid and enforceable until the Contractor has executed and completed the Works and remedied any defects, as specified for the Performance Security. On receipt by the Employer of the required guarantee, the Engineer shall certify, and the Employer shall pay the second half of the Retention Money. The release of the second half of the Retention Money against a guarantee shall then be in lieu of the release after the latest of the expiry dates of the Defects Notification Periods. The Employer shall return the guarantee to the Contractor within 21 days after receiving a copy of the Performance Certificate.

If the Performance Security required under Sub-Clause 4.2 is in the form of a demand guarantee, and the amount guaranteed under them when the Taking-Over Certificate is issued is more than half of the Retention Money, then the Retention Money guarantee will not be required. If the amount guaranteed under the Performance Security when the Taking-Over Certificate is issued is less than half of the Retention Money, the Retention Money guarantee will only be required for the difference between half of the Retention Money and the amount guaranteed under the Performance Security.

15.2 Termination for Contractor’s Default

15.2.1 Notice
Following text is added at the end of sub-paragraph (h) of this Sub-Clause:
“For the purposes of this Contract, corrupt and fraudulent practices have been defined in Public Procurement Rules 2026.”
15.2.3 After Termination
The word “and” at the end of sub-paragraph (ii) of paragraph (b) is deleted the following paragraph is added after sub-paragraph (iii):
“(iv) all Employer-Supplied Materials and/or Employer's Equipment madeavailable to the Contractor in

accordance with Sub-Clause 2.6 [Employer-Supplied Materials and Employer's Equipment], and”

15.4 Payment after Termination

The following text is added at the end of this Sub-Clause:
“The Employer shall be entitled to sell any of the Contractor’s Equipment, Temporary Works and unused materials and apply the proceeds of sale towards payment of any debt due from the Contractor to the Employer under this Clause including any outstanding payments to the Subcontractors.

16.2 Termination by Contractor

16.2.1 Notice
The sub-paragraph (j) is deleted in its entirety.
At the end of sub-paragraph (i) “; or” is replaced with “.” and at the end of sub-paragraph (h) “;” is replaced with “; or”.
In sub-paragraph (f) “84 days” are replaced with “180 days” and text “for reasons not attributable to the Contractor” is added at the end.

16.3 Contractor’s Obligations After Termination

Sub-paragraph (c) is deleted and replaced with:
"(c) deliver to the Engineer all Employer-Supplied Materials and/orEmployer's Equipment made available to the Contractor in accordance with Sub-Clause 2.6 [Employer-Supplied Materials and Employer’s Equipment]; and
(d) remove all other Goods from the Site, except as necessary for safety,and leave the Site."

17.1 Responsibility for Care of the Works

After the two instances of “Goods” in the last paragraph, the words “Employer-Supplied Materials and/orEmployer's Equipment” are added.
The following Sub-Clause 17.7 is added after Sub-Clause 17.6:

17.7 Use of Employer’s Accommodation/Facilities

The Contractor shall take full responsibility for the care of the items of the Employer’s facilities and/or accommodation, if any, as detailed in the Specification, from the date of use and/or occupation by the Contractor until the date on which such use and/or occupation is re-vested in the Employer.
If any loss or damage happens to any of the above items during a time while the Contractor is responsible for its care, arising from any cause other than a cause for which the Employer is responsible or liable, the Contractor shall promptly rectify the loss or damage at the Contractor’s risk and cost.

18.1 Exceptional Events

The words “or disorder” are replaced with “disorder or sabotage” in sub-paragraph (c) of the Clause.

18.4 Consequences of an Exceptional Event

The following is added at the end of sub-paragraph (b) after deleting the “.”:
“, including the costs of rectifying or replacing the Works and/or Goods damaged or destroyed by Exceptional Events, to the extent they are not indemnified through the insurance policy referred to in Sub-Clause 19.2 [Insurance to be provided by the Contractor].”

18.5 Optional Termination

In sub-paragraph (c), the words “and necessarily” areadded after the words “was reasonably”.

19.1 General Requirements

Following text is added at the end of first paragraph:
"The Contractor shall immediately after the date of the Letter of Acceptance submit the draft of insurance policies for the Employer's consent."
Following text is added at the end of third paragraph:
"The Contractor shall, within the respective periods stated in the Contract Data submit to the Engineer and the Employer a) evidence that the insurances described in this Clause have been effected, and b) copies of policies of the insurances described in Sub-Clauses 19.2.1, 19.2.4 and 19.2.5."

19.2 Insurance to be provided by the Contractor

19.2.5 Injury to employees
The words "sickness, disease" are deleted in the third line of first paragraph.

The following Sub-Clause is added after Sub-Clause 19.2.6:
19.2.7 Insurance Company
"The Contractor shall be obliged to place all insurances described in this Clause with insurers listed in the Contract Data and rated byPACRA/VISofrating as provided in Table below:

Accepted Contract Amount (In Eq. million PKR) Minimum Rating of Insurance Companies
Up to 1000 A (+)
1001 to no limit AA

21.6 Arbitration

The word "international" is deleted in the sixth line of first paragraph. The text of sub-paragraph (a) is substituted with the following:
"the Dispute shall be finally settled under the Rules of Arbitration, specified in the Contract Data;"
The following Clauses are added after Clause 21

22 Custom Duty

[Employer may incorporate provisions where applicable. However, in order to make the bid more balanced, the payment of Customs Duties should be the responsibility of the Employer.]

23 Taxes

The Contractor, Subcontractors and their employees shall be liable to pay income tax, withholding tax, super tax and other taxes on income arising out of the Contract. The rates and prices as stated in the contract shall be deemed to cover all such taxes.

24 Integrity Part

If it is found and established at any stage that the Contractor or any of his Subcontractors, agents or servants have violated or involved in violation of the Integrity Pact signed by the Contractor then the Employer shall be entitled to :
(a) recover from the Contractor an amount equivalent to ten times the sum of any commission, gratification, bribe, finder's fee or kickback given by the Contractor or any of his Subcontractors, agent or servants;
(b) terminate the Contract; and
(c) recover from the Contractor any loss or damage to the Employer as a result of such termination or of any other corrupt business practices of the Contractor or any of his Subcontractors, agent or servants.
The termination under sub-paragraph(b) of this Sub-Clause shall proceed in the manner prescribed under

Sub-Clause 15.1 to 15.4 and the payment under Sub-Clause 15.4 shall be made after having deducted the amounts due to the Employer under sub-paragraph(a) and (c) of this Sub-Clause.

Appendix General Conditions of Dispute Avoidance/Adjudication Agreement

12 Disputes Under DAAB Agreement

In the first paragraph, third, fourth and fifth line, the text “under the Rules of Arbitration of the International Chamber of Commerce 2017……shall apply” is substituted with “under the Arbitration Act 1940 by sole arbitrator appointed by the Managing Director Public Procurement Regulatory Authority or Chairman Pakistan Engineering Council.”

PUBLIC PROCUREMENT REGULATORY AUTHORITY (PPRA) EPADS

Bid Securing Declaration

FORM OF BID SECURING DECLARATION

Date:
No.:
Alternative No.: ***P211713***

To: **Sector Development (Capital Development Authority), Deputy Director Room No 29, CDA Main Secretariat, Block No-III, First Floor, Sector G-7/4, Islamabad.**

We, the undersigned, declare that:

We understand that, according to your conditions, Bids must be supported by a Bid-Securing Declaration.

We accept that we will be blacklisted and henceforth cross debarred for participating in respective category of public procurement proceedings for a period of (not more than) six months, if fail to abide with a bid securing declaration, however without indulging in corrupt and fraudulent practices, if we are in breach of our obligation(s) under the Bid conditions, because we:

(a) have withdrawn our Bid during the period of Bid validity specified in the Letter of Bid; or
(b) having been notified of the acceptance of our Bid by the Procuring agency/Employer during the period of Bid validity, (i) fail or refuse to sign the Contract; or (ii) fail or refuse to furnish the Performance Security (or guarantee), if required, in accordance with the ITB.

We understand this Bid Securing Declaration shall expire if we are not the successful Bidder, upon the earlier of (i) our receipt of your notification to us of the name of the successful Bidder; or (ii) twenty-eight days after the expiration of our Bid.

Name of the Bidder*
Name of the person duly authorized to sign the Bid on behalf of the Bidder** _____
Title of the person signing the Bid _____
Signature of the person named above _____
Date signed _____ day of _____, _____
*: In the case of the Bid submitted by joint venture specify the name of the Joint Venture as Bidder
**: Person signing the Bid shall have the power of attorney given by the Bidder attached to the Bid

[Note: In case of a Joint Venture, the Bid-Securing Declaration must be in the name of all members to the Joint Venture that submits the Bid.]

Contract Form

FORM OF CONTRACT AGREEMENT

THIS CONTRACT AGREEMENT (hereinafter called the "Agreement") made on the _____ day of _____ (month) 20_____ between **Sector Development (Capital Development Authority), Deputy Director Room No 29, CDA Main Secretariat, Block No-III, First Floor, Sector G-7/4, Islamabad.** (hereinafter called the "Employer") of the one part and _____ (hereinafter called the "Contractor") of the other part.

WHEREAS the Employer is desirous that certain Works, viz., **ESTABLISHMENT OF CDA ONE WINDOW CELL AT G-7, ISLAMABAD. (*P211713*)** should be executed by the Contractor and has accepted a Bid by the Contractor for the execution and completion of such Works and the remedying of any defects therein.

NOW this Agreement witnessed as follows:

1. In this Agreement words and expressions shall have the same meanings as are respectively assigned to them in the Conditions of Contract hereinafter referred to.
2. The following documents, in the order of priority, after incorporating addenda, if any, except those parts relating to Instructions to Bidders shall be deemed to form and be read and construed as part of this Agreement:

a) This Contract Agreement;
b) The Letter of Acceptance;
c) The Letter of Bid;
d) The Particular Conditions Part A - Contract Data;
e) The Particular Conditions Part B - SpecialProvisions;
f) The General Conditions;
g) The Specifications Part A - SpecificProvisions;
h) The Specifications Part B- Technical Provisions;
i) The Drawings;
j) The Completed Schedules to Bid including Schedule of Prices;
k) the JV Undertaking (if the Contractor is a JV); and
l) [Employer to insert any other documents forming part of the Contract]

The addenda/corrigenda,if any, (Excluding part relating to Instructions to Bidders alongwith Bidding Data) shall be deemed to have been incorporated at the appropriate places in the "Documents forming the Contract".

3. In consideration of the payments to be made by the Employer to the Contractor as hereinafter mentioned, the Contractor hereby covenants with the Employer to execute and complete the Works and remedy defects therein in conformity and in all respects with the provisions of the Contract.
4. The Employer hereby covenants to pay the Contractor, in consideration of the execution and completion of the Works as per provisions of the Contract, the Contract Price or such other sum as may become payable under the provisions of the Contract at the times and in the manner prescribed by the Contract.

IN WITNESS WHEREOF the parties hereto have caused this Agreement to be executed on the day, month and year first before written in accordance with their respective laws.

Signature of the Contactor Signature of Employer

(Seal) (Seal)

Signed, Sealed and Delivered in the presence of:

Witness Witness

(Name, Title and Address) (Name, Title and Address)

DAAB Agreement

[All italicised text and any text within square brackets (except sub-clause headings) in this form of agreement is for use in preparing the form and should be deleted from the final product].

Name and details of the Contract ESTABLISHMENT OF CDA ONE WINDOW CELL AT G-7, ISLAMABAD.

_____

This Agreement made the _____day of _____ [month], _____ [year], between

Name and contact details of the Employer **Sector Development (Capital Development Authority), Deputy Director**
Room No 29, CDA Main Secretariat, Block No-III, First Floor, Sector G-7/4, Islamabad.
+92-333-422-8511
ejazulhassan91@gmail.com

Name and contact details of the Contractor _____ (name)
_____ (address)
_____ (telephone)
_____(email / other contact details);

Name and contact details of the DAAB Member _____ (name)
_____ (address)
_____ (telephone)
_____(email / other contact details);

("DAAB Agreement")

Whereas:
A. the Employer and the Contractor have entered (or intend to enter) into the Contract;
B. under the Contract, the "DAAB" or "Dispute Avoidance/Adjudication Board" means the sole member or three members (as stated in the Contract Data of the Contract) so named in the Contract, or appointed under Sub-Clause 21.1 [Constitution of the DAAB] or Sub-Clause 21.2 [Failure to Appoint DAAB Members] of the Conditions of Contract;
C. the Employer and the Contractor desire jointly to appoint the above-named DAAB Member to act on the DAAB as:
a. the sole member of the DAAB, and where this is the case, all references to the "Other Members" do not apply; or
b. one of three members / chairman [delete the one which is not applicable] of the DAAB and, where this is the case, the other two persons are:

_____ (name) _____ (name)
_____ (address) _____ (address)
_____(telephone) _____(telephone)
_____(email/ other contact details) _____ (email/other contact details)

the "**Other Members**"; and
D. the DAAB Member accepts this appointment.

The Employer, Contractor and DAAB Member jointly agree as follows:

1. The conditions of this DAAB Agreement comprise:
(a) Clause 21 [Disputes and Arbitration] of the Conditions of Contract, and any other provisions of the Contract that are applicable to the DAAB's Activities; and
(b) the "General Conditions of Dispute Avoidance/Adjudication Agreement", which is appended to the General Conditions of the "Conditions of Contract for Construction" Second Edition 2017 published by FIDIC ("GCs"), as amended and/or added to by the following provisions.
2. [Details of amendments to the GCs, if any. For example:
In the procedural rules annexed to the GCs, Rule _ is deleted and replaced by: " … "]
3. The DAAB Member shall be paid in accordance with Clause 9 of the GCs. The currency of payment shall be _____.
In respect of Sub-Clauses 9.1 and 9.2 of the GCs, the amounts of the DAAB Member's monthly fee and daily fee shall be:
monthly fee_____ per month, and
daily fee of_____ per day
(or as otherwise set under Sub-Clause 9.3 of the GCs).
4. In consideration of the above fees, and other payments to be made to the DAAB Member in accordance with the GCs, the DAAB Member undertakes to act as DAAB Member in accordance with the terms of this DAAB Agreement.
5. The Employer and the Contractor shall be jointly and severally liable for the DAAB Member's fees and other payments to be made to the DAAB Member in accordance with the GCs.
6. This DAAB Agreement shall be governed by the law of _____ (if not stated, the law that governs the Contract under Sub-Clause 1.4 of the Conditions of Contract).

SIGNED by:_____	SIGNED by:_____	SIGNED by:_____
Print name:_____	Print name:_____	DAAB Member
Title: _____	Title:_____	Title:_____
for and on behalf of the Employer	for and on behalf of the Contractor	
in the presence of	in the presence of	in the presence of
Witness:_____	Witness:_____	Witness:_____
Name:_____	Name:_____	Name:_____
Address:_____	Address:_____	Address:_____
_____	_____	_____
Date:_____	Date:_____	Date:_____

FORM OF MOBILIZATION ADVANCE GUARANTEE/ BOND

Guarantee No._____ Date _____

WHEREAS _____ (hereinafter called the 'Employer')
has entered into a Contract for _____
(Particulars of Contract)
with _____ (hereinafter called the "Contractor').
AND WHEREAS, the Employer has agreed to advance to the Contractor, at the Contractor's request, an amount of Pak Rupees _____ (PKR _____) which amount shall be advanced to the Contractor as per provisions of the Contract.
AND WHEREAS, the Employer has asked the Contractor to furnish Guarantee to secure the mobilization advance for the performance of his obligations under the said Contract.
AND WHEREAS, _____

(hereinafter called the “Guarantor”) at the request of the Contractor and in consideration of theEmployer agreeing to make the above advance to the Contractor, has agreed to furnish the said Guarantee.
NOW, THEREFORE, the Guarantor hereby guarantees that the Contractor shall use the advance for the purpose of above mentioned Contract and if he fails and commits default in fulfilment of any of his obligations for which the advance payment is made, the Guarantor shall be liable to the Employer for payment not exceeding the aforementioned amount.
Notice in writing of any default,on the part of the Contractor, of which the Employer at his discretion of making decision, shall be given by the Employer to the Guarantor, and on such first written demand, payment shall be made by the Guarantor of all sums then due under this Guarantee without any reference to the Contractor and without any objection.
This Guarantee shall remain in force until the advance is fully adjusted against payments from the Interim Payment Certificates of the Contractor or until _____whichever is earlier.
(Date)
The Guarantor's liability under this Guarantee shall not in any case exceed the sum of
PKR _____ (PakRupees _____).
This Guarantee shall remain valid up to the aforesaid date and shall be null and void after the aforesaid date or earlier if the advance made to the Contractor is fully adjusted against paymentsfrom Interim Payment Certificates of the Contractor provided that the Guarantor

agrees that the aforesaid period of validity shall be deemed to be extended if on the above mentioned date the advance payment is not fully adjusted.

Guarantor
(Scheduled Bank/ Insurance Company)

Signature _____
Name _____
Title _____

WITNESS:

1. _____

_____

Corporate Secretary (Seal) Corporate Guarantor (Seal)

2. _____

_____

Name, Title & Address

PUBLIC PROCUREMENT REGULATORY AUTHORITY (PPRA) EPADS

Retention Money Security
Demand Guarantee

_____ [Guarantor letterhead or SWIFT identifier code]
Beneficiary: _____ [Insert name and Address of Employer]
Date: _____[Insert date of issue]
RETENTION MONEY GUARANTEE No.: [Insert guarantee reference number]
Guarantor: [Insert name and address of place of issue, unless indicated in the letterhead]

We have been informed that _____ [insert name of Contractor, which in the case of a joint venture shall be the name of the joint venture] (hereinafter called "the Contractor") has entered into Contract No. _____ [insert reference number of the contract] dated _____ with the Employer, for the execution of _____ [insert name of contract and brief description of Works] (hereinafter called "the Contract").
Furthermore, we understand that, according to the conditions of the Contract, the Employer retains moneys up to the limit set forth in the Contract ("the Retention Money"), and that when the Taking-Over Certificate has been issued under the Contract and the first half of the Retention Money has been certified for payment, payment of [insert the second half of the Retention Money orifthe amount guaranteed under the Performance Guarantee when the Taking-Over Certificate is issued is less than half of the Retention Money, the difference between half of the Retention Money and the amount guaranteed under the Performance Security and, if required, the ES Performance Security] is to be made against a Retention Money guarantee.
At the request of the Applicant, we, as Guarantor, hereby irrevocably undertake to pay the Beneficiary any sum or sums not exceeding in total an amount of _____ [insert amount in figures] () [amount in words] upon receipt by us of the Employer's complying demand supported by the Beneficiary's statement, whether in the demand itself or in a separate signed document accompanying or identifying the demand, stating that the Applicant is in breach of its obligation(s) under the Contract, without your needing to prove or show grounds for your demand or the sum specified therein.
A demand under this guarantee may be presented as from the presentation to the Guarantor of a certificate from the Employer's bank stating that the second half of the Retention Money as referred to above has been credited to the contractor on its account number _____ at _____ [insert name and address of Contractor's bank].
This guarantee shall expire no later than the …. day of ……, 2…, and any demand for payment under it must be received by us at the office indicated above on or before that date.

_____
[signature(s)]

Note: All italicized text (including footnotes) is for use in preparing this form and shall be deleted from the final product.

Integrity Pact

Integrity Pact

DECLARATION OF FEES, COMMISSION AND BROKERAGE ETC. PAYABLE BYTHE SUPPLIERS OF GOODS, SERVICES & WORKS IN CONTRACTS WORTH RS.10.00 MILLION OR MORE

Contract Number: Contract Value: Contract Title:

Dated:

[Name of Supplier] hereby declares that it has not obtained or induced the procurement of any contract, right, interest, privilege or other obligation or benefit from Government of Pakistan or any administrative subdivision or agency thereof or any other entity owned or controlled by it (GoP) through any corrupt business practice.

Without limiting the generality of the foregoing [Name of Supplier] represents and warrants that it has fully declared the brokerage, commission, fee etc. paid or payable to anyone and not given or agreed to give and shall not give or agree to give to anyone within or outside Pakistan either directly or indirectly through any natural or juridical person, including its affiliate, agent, associate, broker, consultant, director, promoter, shareholder, sponsor or subsidiary, any commission, gratification, bribe, finder's fee or kickback, whether described as consultations fee or otherwise, with the object of obtaining or inducing the procurement of a contract, right, interest, privilege or other obligation or benefit in whatsoever form from GoP, except that which has been expressly declared pursuant hereto.

[Name of Supplier] certifies that it has made and will make full disclosure of all agreements and arrangements with all persons in respect of or related to the transaction with GoP and has not taken any action or will not take any action to circumvent the above declaration, representative or warranty.

[Name of Supplier] accepts full responsibility and strict liability for making and false declaration, not making full disclosure, misrepresenting fact or taking any action likely to defeat the purpose of this declaration, representation and warranty. It agrees that any contract, right interest, privilege or other obligation or benefit obtained or procured as aforesaid shall, without prejudice to any other right and remedies available to GoP under any law, contract or other instrument, be voidable at the option of GoP.

Notwithstanding any rights and remedies exercised by GoP in this regard, [Name of Supplier] agrees to indemnify GoP for any loss or damage incurred by it on account of its corrupt business practices and further pay compensation to GoP in an amount equivalent to ten time the sum of any commission, gratification, bribe, finder's fee or kickback given by [Name of Supplier] as aforesaid for the purpose of obtaining or inducing the procurement of any contract, right, interest, privilege or other obligation or benefit in whatsoever form from GoP.

Name of Employer: …… Name of Bidder/Contractor: ……
Signature: …… Signature: …….
[Seal] [Seal]

Performance Guarantee Form

FORM OF PERFORMANCE SECURITY

Guarantee No._____
Executed on _____
Expiry date _____

Name of Guarantor with address: _____

Name of Principal (Contractor) with address:_____

Penal Sum of Security (express in words and figures) _____

Letter of Acceptance No. _____Dated _____

KNOW ALL MEN BY THESE PRESENTS, that in pursuance of the terms of the Bidding Documents and above said Letter of Acceptance (hereinafter called the Documents) and at the request of the said Principal we, the Guarantor above named, are held and firmly bound unto the **Sector Development (Capital Development Authority), Deputy Director Room No 29, CDA Main Secretariat, Block No-III, First Floor, Sector G-7/4, Islamabad.** (hereinafter called the Employer) in the penal sum of the amount stated above for the payment of which sum well and truly to be made to the said Employer, we bind ourselves, our heirs, executors, administrators and successors, jointly and severally, firmly by these presents.

THE CONDITION OF THIS OBLIGATION IS SUCH, that whereas the Principal has accepted the Employer's above said Letter of Acceptance for _____ _____

(Name of Contract) for the **ESTABLISHMENT OF CDA ONE WINDOW CELL AT G-7, ISLAMABAD.** (**P211713**)
_____ (Name of Project).

NOW THEREFORE, if the Principal (Contractor) shall well and truly perform and fulfill all the undertakings, covenants, terms and conditions of the said Documents during the original terms of the said Documents and any extensions thereof that may be granted by the Employer, with or without notice to the Guarantor, which notice is, hereby, waived and shall also well and truly perform and fulfill all the undertakings, covenants terms and conditions of the Contract and of any and all modifications of said Documents that may hereafter be made, notice of which modifications to the Guarantor being hereby waived, then, this obligation to be void; otherwise to remain in full force and virtue till all requirements of Clause11, Defects After Taking Over, of Conditions of Contract are fulfilled.

Our total liability under this Guarantee is limited to the sum stated above and it is a condition of any liability attaching to us under this Guarantee that the claim for payment in writing shall be received by us within the validity period of this Guarantee, failing which we shall be discharged of our liability, if any, under this Guarantee.

We, _____ (the Guarantor), waiving all objections and defense under the Contract, do hereby irrevocably and independently guarantee to pay to the Employer without delay upon the Employer's first written demand without cavil or arguments and without requiring the Employer to prove or to show grounds or reasons for such demand any sum or sums up to the amount stated

above, against the Employer's written declaration that the Principal has refused or failed to perform the obligations under the Contract which payment will be effected by the Guarantor to Employer's designated Bank & Account Number.

PROVIDED ALSO THAT the Employer shall decide, whether the Principal (Contractor) has duly performed his obligations under the Contract or has defaulted in fulfilling said obligations and the Guarantor shall pay without objection any sum or sums up to the amount stated above upon first written demand from the Employer forthwith and without any reference to the Principal or any other person.

IN WITNESS WHEREOF, the above-bounden Guarantor has executed this Instrument under its seal on the date indicated above, the name and corporate seal of the Guarantor being hereto affixed and these presents duly signed by its undersigned representative, pursuant to authority of its governing body.

Guarantor
(Schedule Bank/ Insurance Company)
Signature: _____
Name: _____
Title: _____

Corporate Guarantor (Seal)

WITNESS:

1.
_____
_____

2.

_____
_____
Name, Title & Address

Annexure

Abstract of Cost

Financial Submission (Vendor)

Document Required

See Form Under Additional Forms and Documents: **Abstract of Cost** (page number: 141)

Architectural Working Drawings

Information (Read-Only)

See Form Under Additional Forms and Documents: **Architectural Working Drawings** (page number: 142)

Structure Drawings

Information (Read-Only)

See Form Under Additional Forms and Documents: **Structure Drawings** (page number: 155)

PUBLIC PROCUREMENT REGULATORY AUTHORITY (PPRA) EPADS

Procurement Forms

PUBLIC PROCUREMENT REGULATORY AUTHORITY
(PPRA)
EPADS

PUBLIC PROCUREMENT REGULATORY AUTHORITY
(PPRA)
EPADS

Additional Forms and Documents

CAPITAL DEVELOPMENT AUTHORITY

(Sector Development Division-II)

Subject: **ESTABLISHMENT OF CDA ONE WINDOW CELL AT G-7, ISLAMABAD**

ABSTRACT OF COST ESTIMATE

The bidder shall quote bid cost in percentage (above/below) of estimated cost in the respective sub heads of the following table:

NIT Cost Rs. 280,707,863/-

Sr.#	Description	Amount (Rs.)
1.	Estimated cost based on MRS 2nd Bi-Annual 2026 (Rawalpindi)	174,902,221/-
	Percentage (above/below) (Rs.)	
	Rs. (A)	
2.	Estimated cost based on Non-Schedule Market Items	
	Percentage (above/below) (Rs.)	105,805,642/-
	Rs. (B)	
	Total NIT Cost Rs (A +B)	280,707,863/-
	Total Bid Cost Rs. (A+B)	

Contractor's Signature/Seal

Address of the Firm/Contractor:_____

Call Deposit Amount & Date:_____

Name of Bank from Issued:_____

PUBLIC PROCUREMENT REGULATORY AUTHORITY (PPRA) EPADS

CDA
ONE WINDOW

ARCHITECTURAL
WORKING DRAWINGS

PUBLIC PROCUREMENT REGULATORY AUTHORITY (PPRA)
EPADS

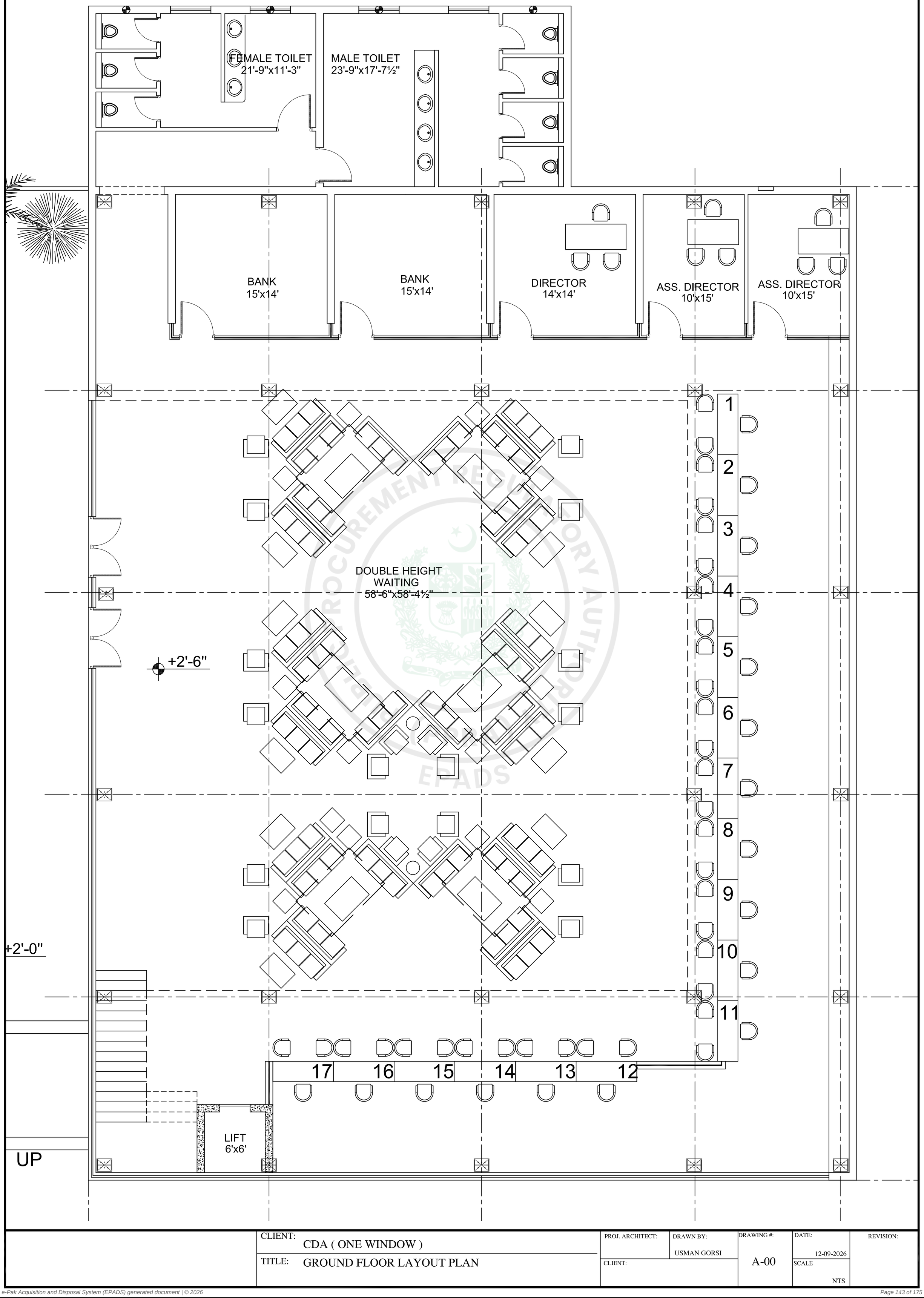

CLIENT: CDA (ONE WINDOW)		PROJ. ARCHITECT:	DRAWN BY: USMAN GORSI	DRAWING #: A-00	DATE: 12-09-2026	REVISION:
TITLE: GROUND FLOOR LAYOUT PLAN		CLIENT:			SCALE NTS	

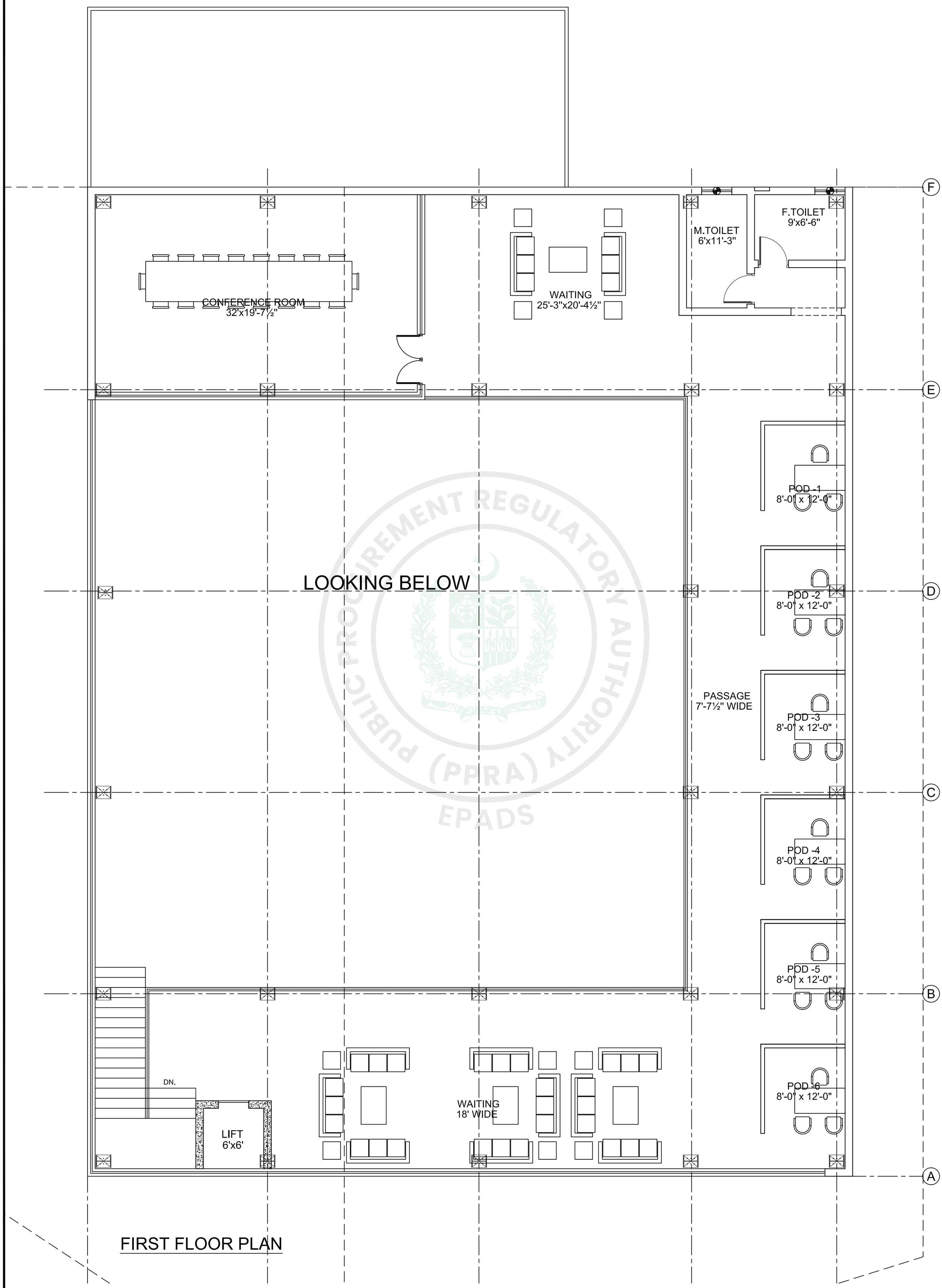

PUBLIC PROCUREMENT REGULATORY AUTHORITY (PPRA)
EPADS

FIRST FLOOR PLAN

CLIENT: CDA (ONE WINDOW)	PROJ. ARCHITECT:	DRAWN BY: USMAN GORSI	DRAWING #: A-00	DATE: 12-09-2026	REVISION:
TITLE: FIRST FLOOR LAYOUT PLAN	CLIENT:			SCALE NTS	

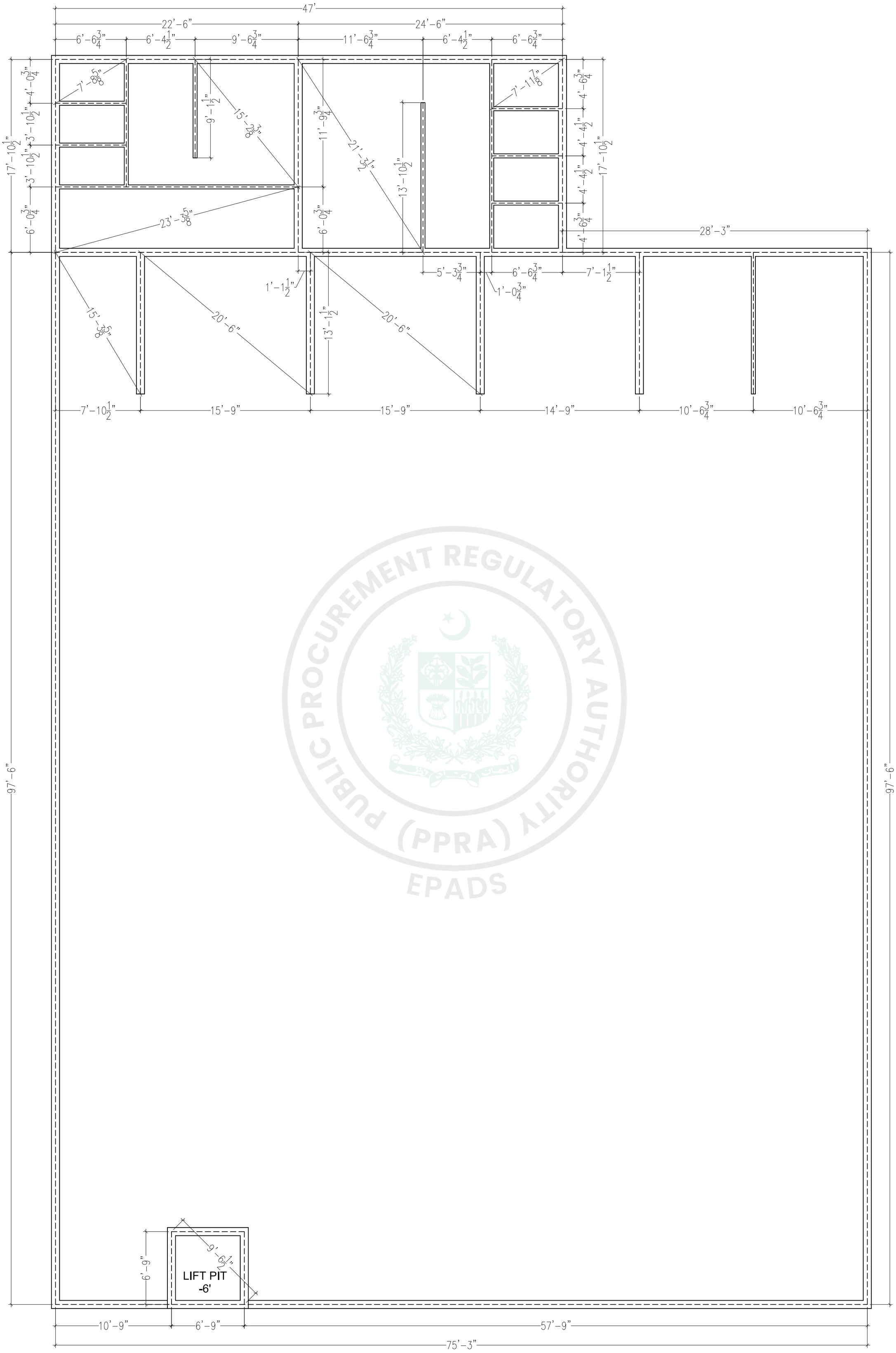

CLIENT: CDA (ONE WINDOW)		PROJ. ARCHITECT:	DRAWN BY: USMAN GORSI	DRAWING #: A-00	DATE: 12-09-2026	REVISION:
TITLE: EXCAVATION PLAN		CLIENT:			SCALE NTS	

e-Pak Acquisition and Disposal System (EPADS) generated document | © 2026

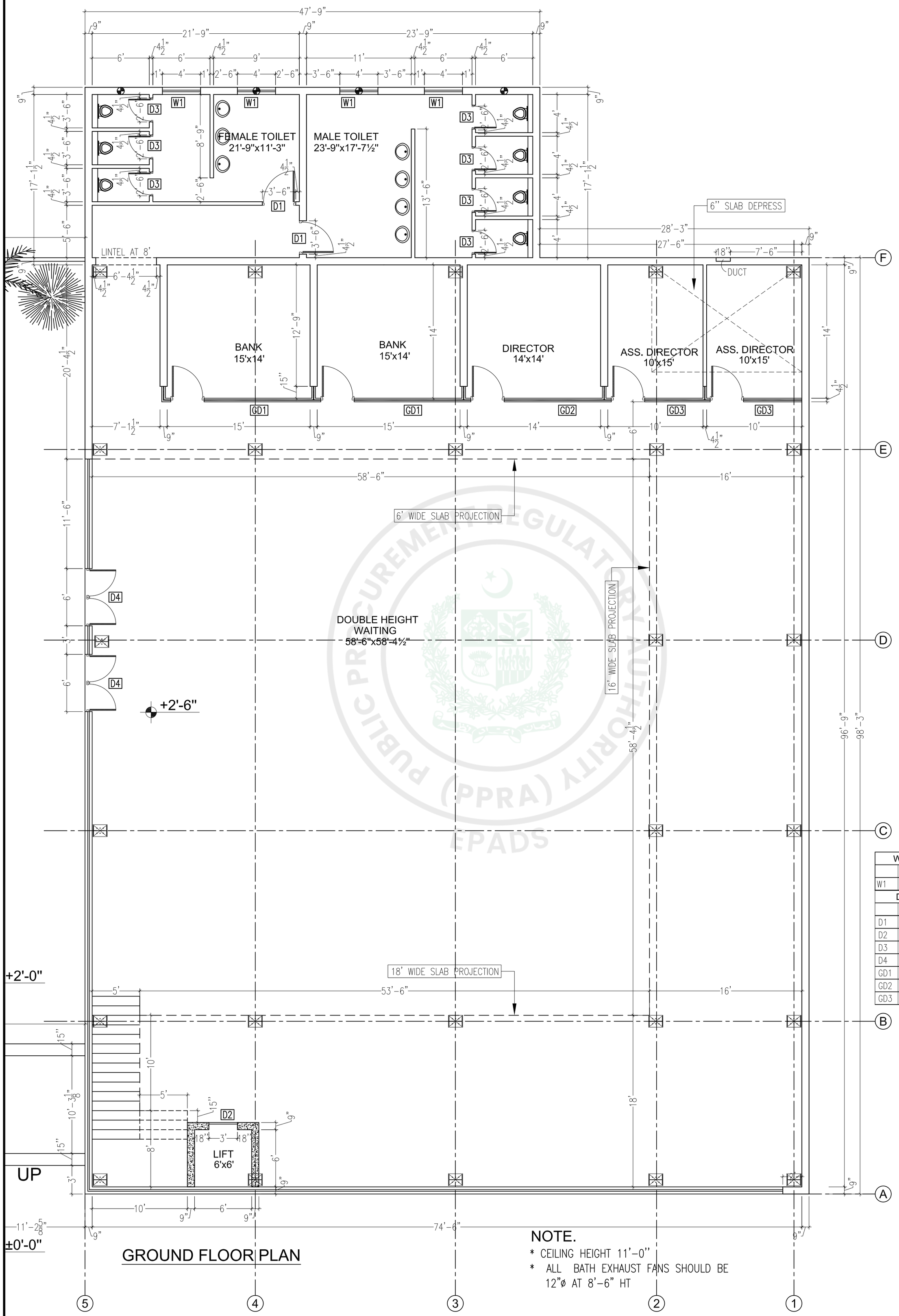

Windows Schedule			
	Width	Height	Sill
W1	4'–0"	2'–0"	6'–0"

Doors Schedule			
	Width	Height	
D1	3'–6"	8'–0"	
D2	3'–0"	8'–0"	
D3	2'–6"	8'–0"	
D4	5'–0"	8'–0"	
GD1	15'–0"	8'–0"	
GD2	14'–0"	8'–0"	
GD3	10'–0"	8'–0"	

GROUND FLOOR PLAN

NOTE.

* CEILING HEIGHT 11'–0"
* ALL BATH EXHAUST FANS SHOULD BE 12"ø AT 8'–6" HT

CLIENT: CDA (ONE WINDOW)	PROJ. ARCHITECT:	DRAWN BY: USMAN GORSI	DRAWING #: A-00	DATE: 12-09-2026	REVISION:
TITLE: GROUND FLOOR WORKING PLAN	CLIENT:			SCALE NTS	

e-Pak Acquisition and Disposal System (EPADS) generated document | © 2026

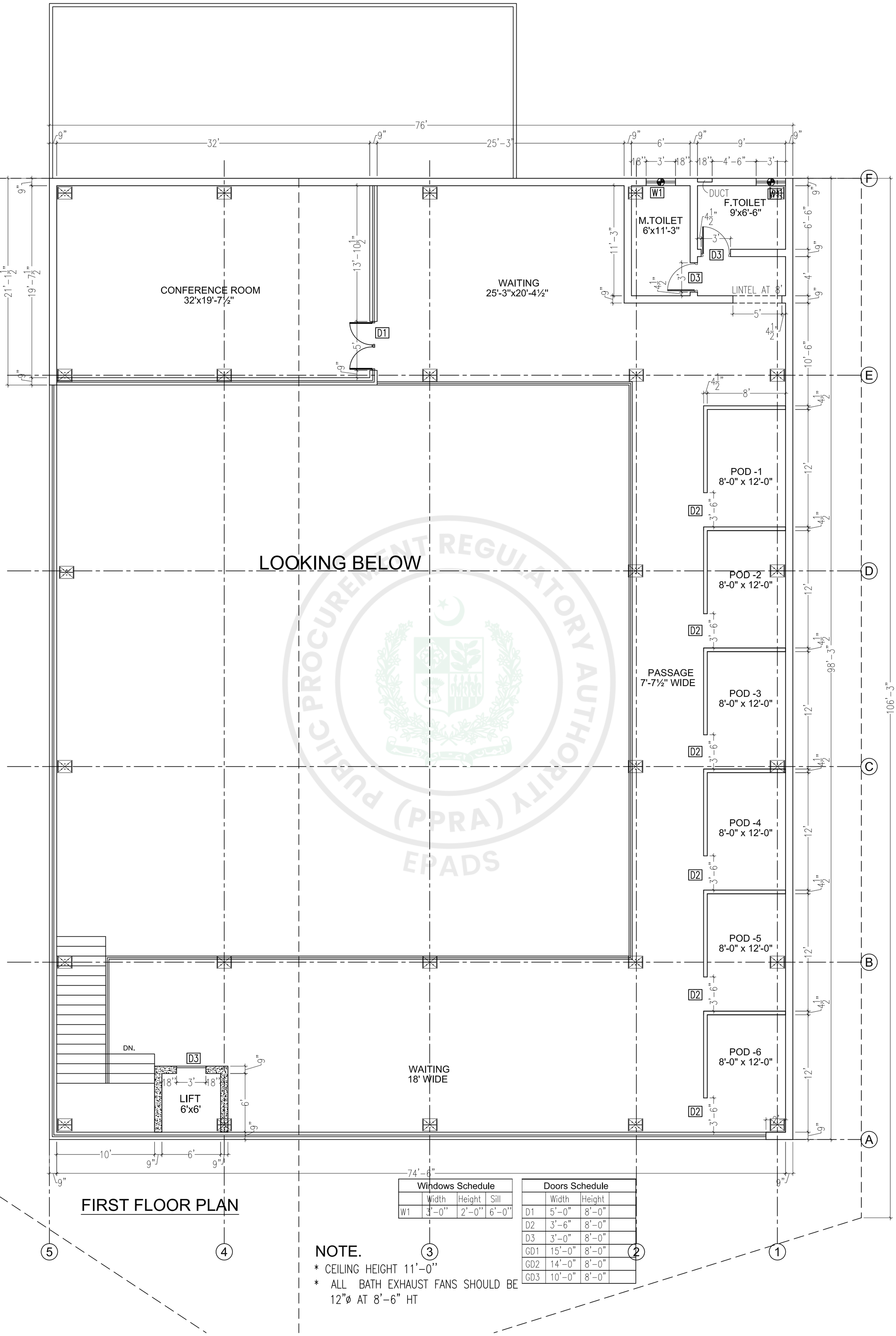

FIRST FLOOR PLAN

Windows Schedule			
	Width	Height	Sill
W1	3'-0"	2'-0"	6'-0"

Doors Schedule		
	Width	Height
D1	5'-0"	8'-0"
D2	3'-6"	8'-0"
D3	3'-0"	8'-0"
GD1	15'-0"	8'-0"
GD2	14'-0"	8'-0"
GD3	10'-0"	8'-0"

NOTE.

* CEILING HEIGHT 11'-0"
* ALL BATH EXHAUST FANS SHOULD BE 12"ø AT 8'-6" HT

CLIENT: CDA (ONE WINDOW)	PROJ. ARCHITECT:	DRAWN BY: USMAN GORSI	DRAWING #: A-00	DATE: 12-09-2026	REVISION:
TITLE: FIRST FLOOR WORKING PLAN	CLIENT:			SCALE NTS	

e-Pak Acquisition and Disposal System (EPADS) generated document | © 2026

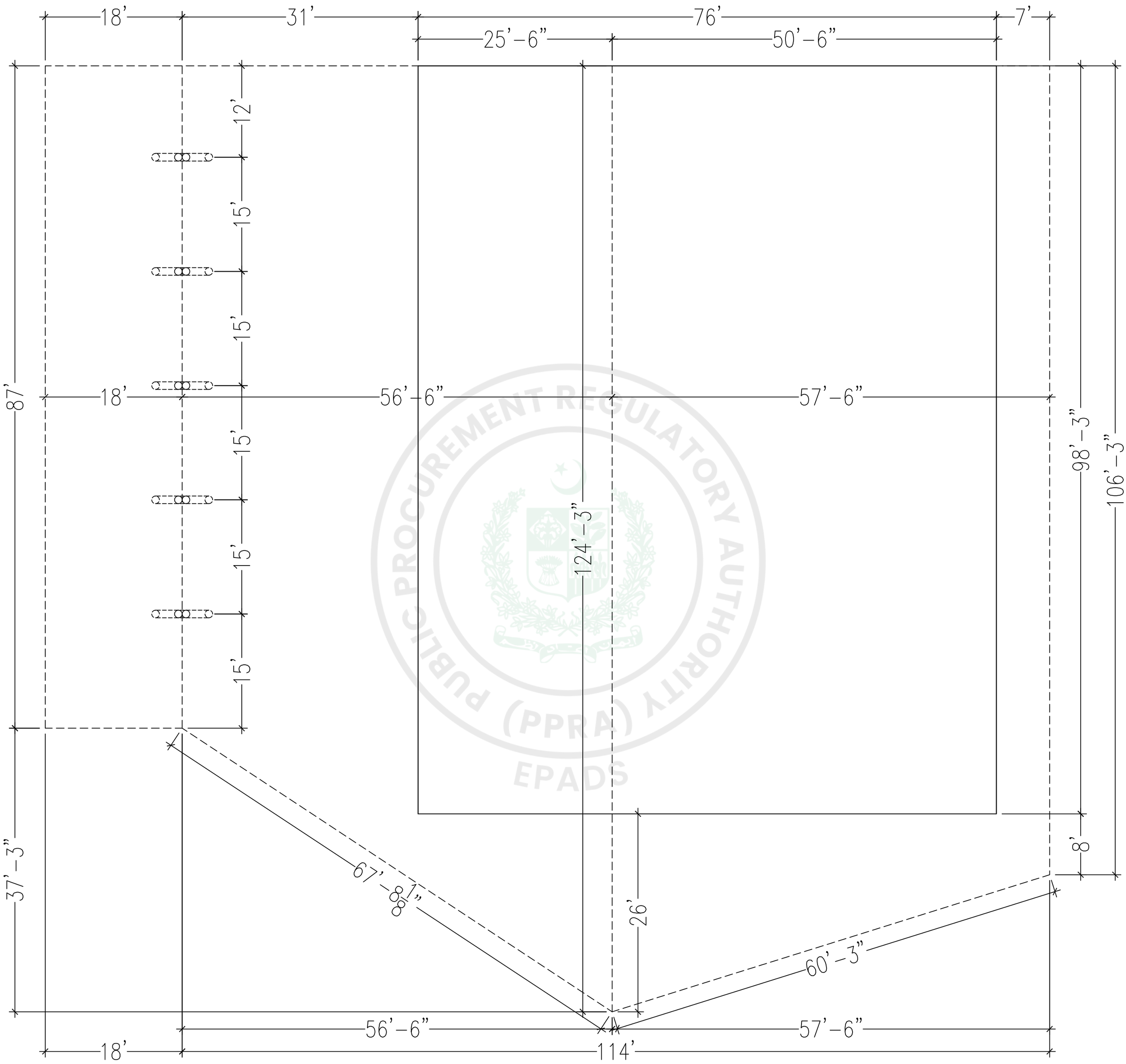

STEEL ROOF PLAN

	CLIENT: CDA (ONE WINDOW)	PROJ. ARCHITECT:	DRAWN BY: USMAN GORSI	DRAWING #: A-00	DATE: 12-09-2026	REVISION:
	TITLE: FIRST FLOOR WORKING PLAN	CLIENT:			SCALE NTS	

e-Pak Acquisition and Disposal System (EPADS) generated document | © 2026

COFFE SHOP AND COUNTER

PUBLIC SQUARE

BANK
15'x14'

LINTEL AT 8'

RAMP

UP

GD1

D4

D4

D2

LIFT
6'x6'

+2'-6"

+2'-0"

±0'-0"

GROUND FLOOR P

CLIENT: CDA (ONE WINDOW)	PROJ. ARCHITECT:	DRAWN BY: USMAN GORSI	DRAWING #: A-00	DATE: 12-09-2026	REVISION:
TITLE: OPEN AREA WORKING PLAN	CLIENT:			SCALE NTS	

e-Pak Acquisition and Disposal System (EPADS) generated document | © 2026

FRONT ELEVATION

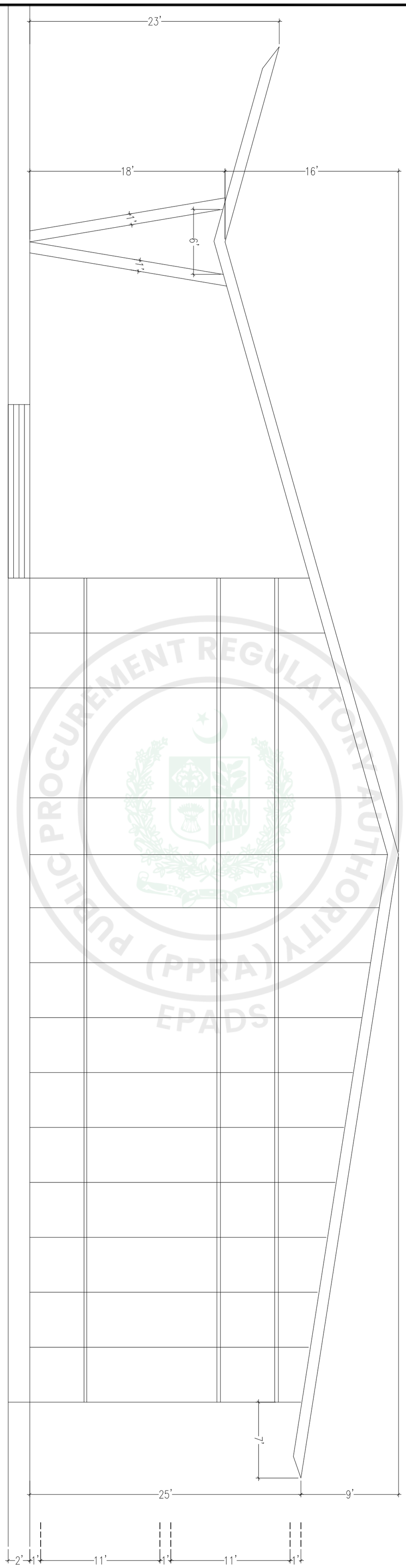

PUBLIC PROCUREMENT REGULATORY AUTHORITY (PPRA) EPADS

CLIENT: CDA (ONE WINDOW)		PROJ. ARCHITECT:	DRAWN BY: USMAN GORSI	DRAWING #: A-00	DATE: 12-09-2026	REVISION:
TITLE: FRONT ELEVATION		CLIENT:			SCALE NTS	

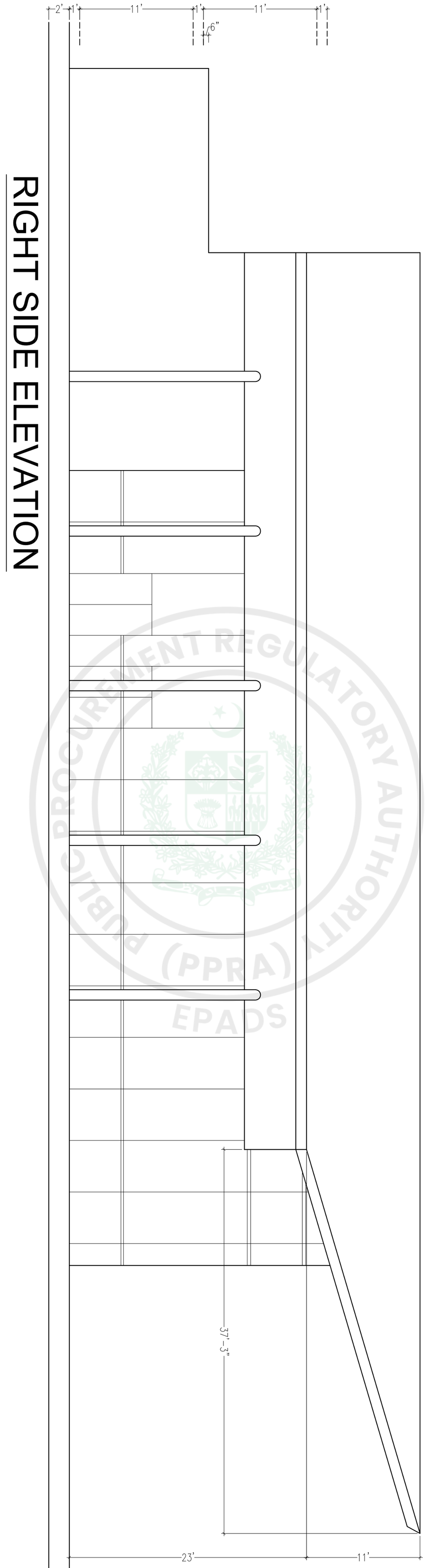

RIGHT SIDE ELEVATION

PROCUREMENT REGULATORY AUTHORITY
PUBLIC (PPRA)
EPADS

CLIENT: CDA (ONE WINDOW)		PROJ. ARCHITECT:	DRAWN BY: USMAN GORSI	DRAWING #: A-00	DATE: 12-09-2026	REVISION:
TITLE: RGHT SIDE ELEVATION		CLIENT:			SCALE: NTS	

LEFT SIDE ELEVATION

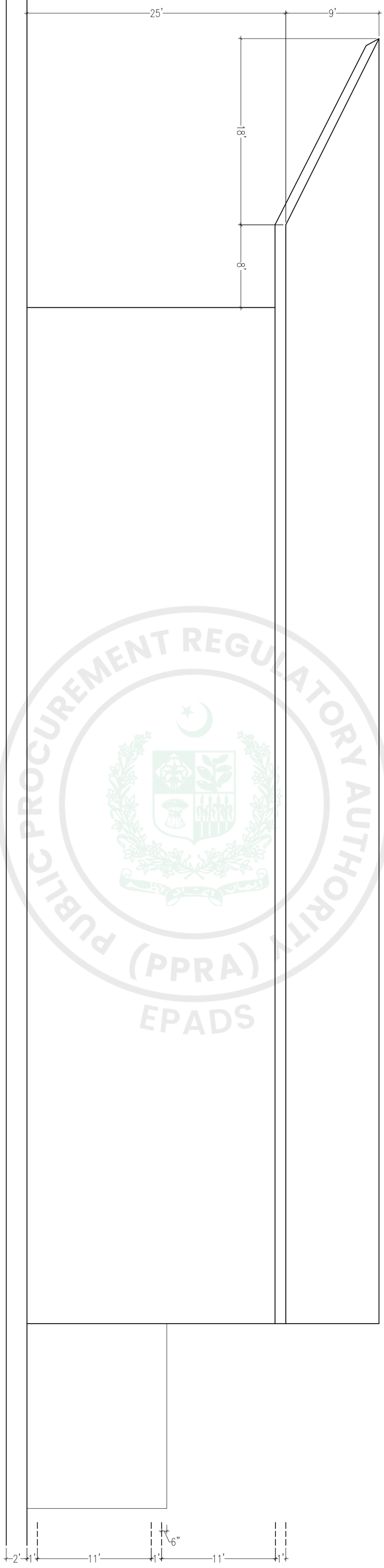

PROCUREMENT REGULATORY AUTHORITY
PUBLIC (PPRA)
EPADS

CLIENT: CDA (ONE WINDOW)		PROJ. ARCHITECT:	DRAWN BY: USMAN GORSI	DRAWING #: A-00	DATE: 12-09-2026	REVISION:
TITLE: LEFT SIDE ELEVATION		CLIENT:			SCALE NTS	

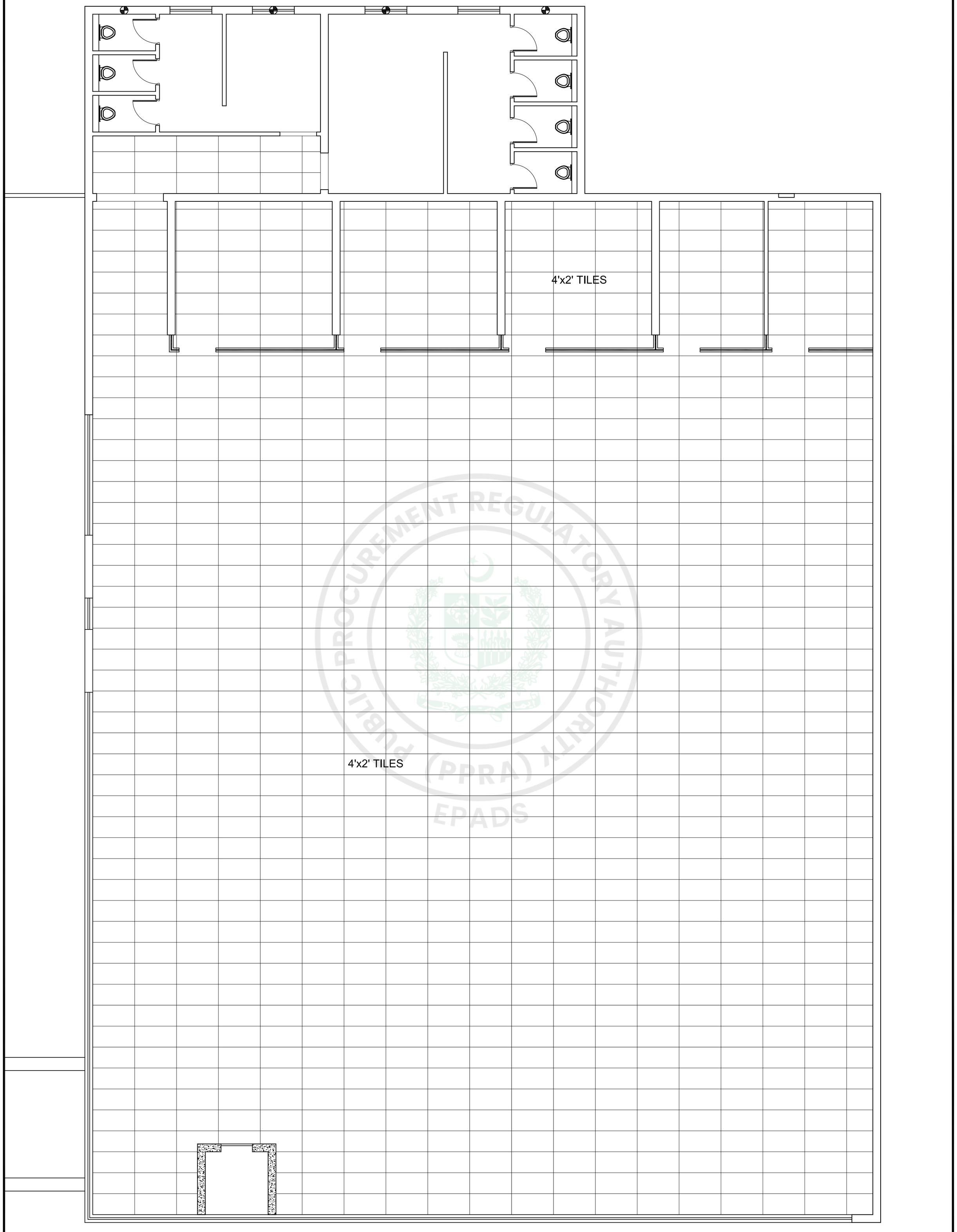

CLIENT: CDA (ONE WINDOW)	PROJ. ARCHITECT:	DRAWN BY: USMAN GORSI	DRAWING #: A-00	DATE: 12-09-2026	REVISION:
TITLE: GROUND FLOOR FLOORING PLAN	CLIENT:			SCALE NTS	

4'x2' TILES

4'x2' TILES

PUBLIC PROCUREMENT REGULATORY AUTHORITY (PPRA) EPADS

CLIENT: CDA (ONE WINDOW)		PROJ. ARCHITECT:	DRAWN BY: USMAN GORSI	DRAWING #: A-00	DATE: 12-09-2026	REVISION:
TITLE: FIRST FLOOR FLOORING PLAN		CLIENT:			SCALE NTS	

DWG.NO.	DRAWING TITLE	REV. NO.	DATE:
ST-00	COVER PAGE	R00	13-09-2026
ST-01	CIVIL STR. DRAWINGS	R00	13-09-2026
ST-02	GENERAL NOTES	R00	13-09-2026
ST-03	FOOTING LAYOUT PLAN	R00	13-09-2026
ST-04	COLUMN LAYOUT PLAN	R00	13-09-2026
ST-05	FOOTING DETAILS - I	R00	13-09-2026
ST-06	FOOTING DETAILS - II	R00	13-09-2026
ST-07	FOOTING DETAILS - III	R00	13-09-2026
ST-08	COLUMN DETAILS	R00	13-09-2026
ST-09	STEEL STR. DRAWINGS	R00	13-09-2026
ST- 10	GENERAL NOTES	R00	13-09-2026
ST- 11	ANCHOR BOLT LAYOUT PLAN	R00	13-09-2026
ST- 12	ANCHOR BOLT DETAILS	R00	13-09-2026
ST- 13	ANCHOR BOLT DETAILS	R00	13-09-2026
ST- 14	MEZZANINE LAYOUT PLAN	R00	13-09-2026
ST- 15	RIGID FRAME CROSS SECTION	R00	13-09-2026
ST- 16	END WALL ELEV.	R00	13-09-2026
ST- 17	SIDE WALL ELEV.	R00	13-09-2026
ST- 18	ROOF FRAMING PLAN	R00	13-09-2026
ST- 19	ROOF SHEETING PLAN	R00	13-09-2026
ST- 20	WELDING DETAIL	R00	13-09-2026

GRAVITY
ENGINEERING SERVICES

STRUCTURE DRAWINGS

CLIENT / COSTUMER NAME: CDA

CONSULTANT: ---

CONTRACTOR: ---

PROJECT NUMBER: GQN-0784-R00

PROJECT USAGE: CDA ONE WINDOW

LOCATION: ISLAMABAD

GRAVITY ENGINEERING SERVICES

PROJECT: CDA ONE WINDOW	CONSULTANT: ---	DRAWING TITLE: ANCHOR BOLT PLAN	DRAWING NO: GQN-0784-ST00-R00
CLIENT: CDA	CONTRACTOR: ---	LOCATION: ISLAMABAD	SCALE: N.T.S / DATE: 13-09-2026 / DRAWN BY: ASD / DESIGN BY: TFL

S.NO.	REVISION DESCRIPTION.	REV. NO.	DATE:
1	ISSUED FOR CONSTRUCTION	R00	13-09-2026
2			
3			
4			

e-Pak Acquisition and Disposal System (EPADS) generated document | © 2026

CIVIL STRUCTURE DRAWINGS

PUBLIC PROCUREMENT REGULATORY AUTHORITY (PPRA) EPADS

GRAVITY
ENGINEERING SERVICES

PROJECT: CDA ONE WINDOW	CONSULTANT: ---	DRAWING TITLE: CIVIL STR. DRAWINGS	DRAWING NO: GQN-0784-ST01-R00
CLIENT: CDA	CONTRACTOR: ---	LOCATION: ISLAMABAD	SCALE: N.T.S / DATE: 13-09-2026 / DRAWN BY: ASD / DESIGN BY: TFL

S.NO.	REVISION DESCRIPTION.	REV. NO.	DATE:
1	ISSUED FOR CONSTRUCTION	R00	13-09-2026
2			
3			
4			

GENERAL NOTES
(CONCRETE WORKS)

1. COORDINATE STRUCTURAL WORK WITH ARCHITECTURAL, MECHANICAL, ELECTRICAL, HVAC AND PLUMBING DRAWINGS. ANY DISCREPANCY SHALL BE REFERRED TO THE ENGINEER. DO NOT GUESS; ASK IF IN DOUBT.

2. ALL DIMENSIONS AND LEVELS ARE IN MILLIMETERS (MM). DO NOT SCALE DRAWINGS. WRITTEN DIMENSIONS SHALL GOVERN.

3. FOUNDATION DESIGN IS BASED UPON ASSUMED SOIL BEARING CAPACITY AS 0.7 TONS/SFT AT DEPTH OF 1524mm FROM N.S.L

4. NO CONCRETE SHALL BE POURED UNTIL FORMWORK, REINFORCEMENT, EMBEDDED ITEMS AND PRE-CAMBER (WHERE REQUIRED) HAVE BEEN INSPECTED AND APPROVED BY THE ENGINEER.

5. PRIOR TO CONCRETING, ALL EMBEDDED ITEMS, SLEEVES, CONDUITS, PIPES AND HOLDFASTS SHALL BE ACCURATELY POSITIONED, CLEAN AND FIRMLY SECURED. REFER TO MEP DRAWINGS.

6. CONCRETE SHALL BE MACHINE MIXED, PLACED AND COMPACTED WITH MECHANICAL VIBRATORS. MAXIMUM AGGREGATE SIZE AND MIX DESIGN SHALL BE AS PER DESIGN AND APPROVED BY THE ENGINEER. AGGREGATE SHALL BE WELL GRADED AND FREE FROM DUST AND ORGANIC MATERIAL.

7. BLINDING CONCRETE (PCC 1:4:8) SHALL CONSIST OF ONE PART CEMENT, FOUR PARTS SAND AND EIGHT PARTS APPROVED CRUSHED STONE.

8. R.C.C CONCRETE CYLINDER STRENGTH AT 28 DAYS SHALL BE:

   - FOUNDATIONS / BEAMS / SLABS 21 MPa
   - COLUMNS / R.C.C WALLS 26–28 MPa
   - LEAN CONCRETE 10 MPa

9. EQUIVALENT CUBE STRENGTH SHALL BE AT LEAST 25% GREATER.

10. CEMENT SHALL CONFORM TO BS-12 / PS-232 / ASTM C150. CEMENT FROM DIFFERENT SOURCES SHALL NOT BE MIXED WITHOUT APPROVAL. SULPHATE RESISTANT CEMENT SHALL BE USED WHERE REQUIRED.

11. ALL R.C.C WORKS SHALL BE MOIST CURED FOR MINIMUM 14–18 DAYS. TEST CUBES/CYLINDERS SHALL BE CURED UNDER CONDITIONS SIMILAR TO ACTUAL WORK.

12. REMOVAL OF FORMWORK SHALL BE AS PER STANDARD PRACTICE AND ENGINEER'S APPROVAL. NO LOAD SHALL BE APPLIED ON NEW SLABS BEFORE 7 DAYS.

13. MINIMUM CLEAR COVER TO REINFORCEMENT SHALL BE AS SHOWN ON DRAWINGS. WHERE NOT SHOWN, FOLLOW STANDARD PRACTICE.

14. REINFORCEMENT SHALL BE HIGH YIELD DEFORMED BARS CONFORMING TO ASTM A615 GRADE 60. BARS SHALL BE CLEAN AND FREE FROM LOOSE RUST, OIL OR FOREIGN MATERIAL.

15. DOTTED LINES INDICATE TOP REINFORCEMENT AND FIRM LINES INDICATE BOTTOM REINFORCEMENT.

16. REINFORCEMENT SHALL BE ACCURATELY PLACED AND FIRMLY HELD BY WIRES, CHAIRS AND SPACERS. CLEAR DISTANCE FROM PIPES, WATER STOPS AND EMBEDMENTS SHALL BE MAINTAINED.

17. LAP LENGTHS SHALL BE AS SHOWN ON DRAWINGS. WHERE BARS OF DIFFERENT SIZES LAP, LENGTH SHALL BE BASED ON THE SMALLER BAR. LAPS SHALL BE STAGGERED AND NOT PROVIDED AT BEAM/COLUMN JOINTS OR WITHIN TWICE MEMBER DEPTH FROM FACE OF JOINT. COLUMN LAPS SHALL BE IN MIDDLE THIRD.

18. BEAM BARS SHALL BE JOGGLED WHERE REQUIRED. STIRRUPS SHALL HAVE 135° HOOKS WITH HOOKS IN COMPRESSION ZONE.

19. DISTRIBUTION AND HOLDING BARS NOT SHOWN SHALL BE PROVIDED AS PER DESIGN.

20. SURFACE OF OLD CONCRETE SHALL BE ROUGHENED AND CLEANED. APPROVED BONDING AGENT SHALL BE USED WHERE NEW AND OLD CONCRETE MEET.

21. LOCAL ADJUSTMENTS AROUND OPENINGS AND EMBEDMENTS MAY BE MADE WITH ENGINEER'S APPROVAL PROVIDED DESIGN IS NOT AFFECTED.

22. BACKFILLING SHALL BE DONE IN LAYERS AND COMPACTED TO SPECIFIED DENSITY.

23. WATERPROOFING ADMIXTURE SHALL BE USED IN RETAINING WALLS AND WATER-RETAINING STRUCTURES WHERE SPECIFIED.

24. STEEL, AGGREGATE AND CONCRETE SHALL BE TESTED AT DIFFERENT STAGES AS DIRECTED BY THE ENGINEER. TEST REPORTS SHALL BE VERIFIED BY THE CONSULTANT.

25. DURING CONSTRUCTION, SAFETY AND STABILITY OF STRUCTURE AND TEMPORARY WORKS SHALL BE MAINTAINED AT ALL TIMES.

GRAVITY
ENGINEERING SERVICES

PROJECT: CDA ONE WINDOW	CONSULTANT: ---	DRAWING TITLE: GENERAL NOTES	DRAWING NO: GQN-0784-ST02-R00
CLIENT: CDA	CONTRACTOR: ---	LOCATION: ISLAMABAD	SCALE: N.T.S / DATE: 13-09-2026 / DRAWN BY: ASD / DESIGN BY: TFL

S.NO.	REVISION DESCRIPTION.	REV. NO.	DATE:
1	ISSUED FOR CONSTRUCTION	R00	13-09-2026
2			
3			
4			

e-Pak Acquisition and Disposal System (EPADS) generated document | © 2026

O/O = OUT TO OUT
C/C = CENTER TO CENTER
C/O = CENTER OF
S.L = STEEL LINE
G.L = GRID LINE
C.L = CENTER LINE

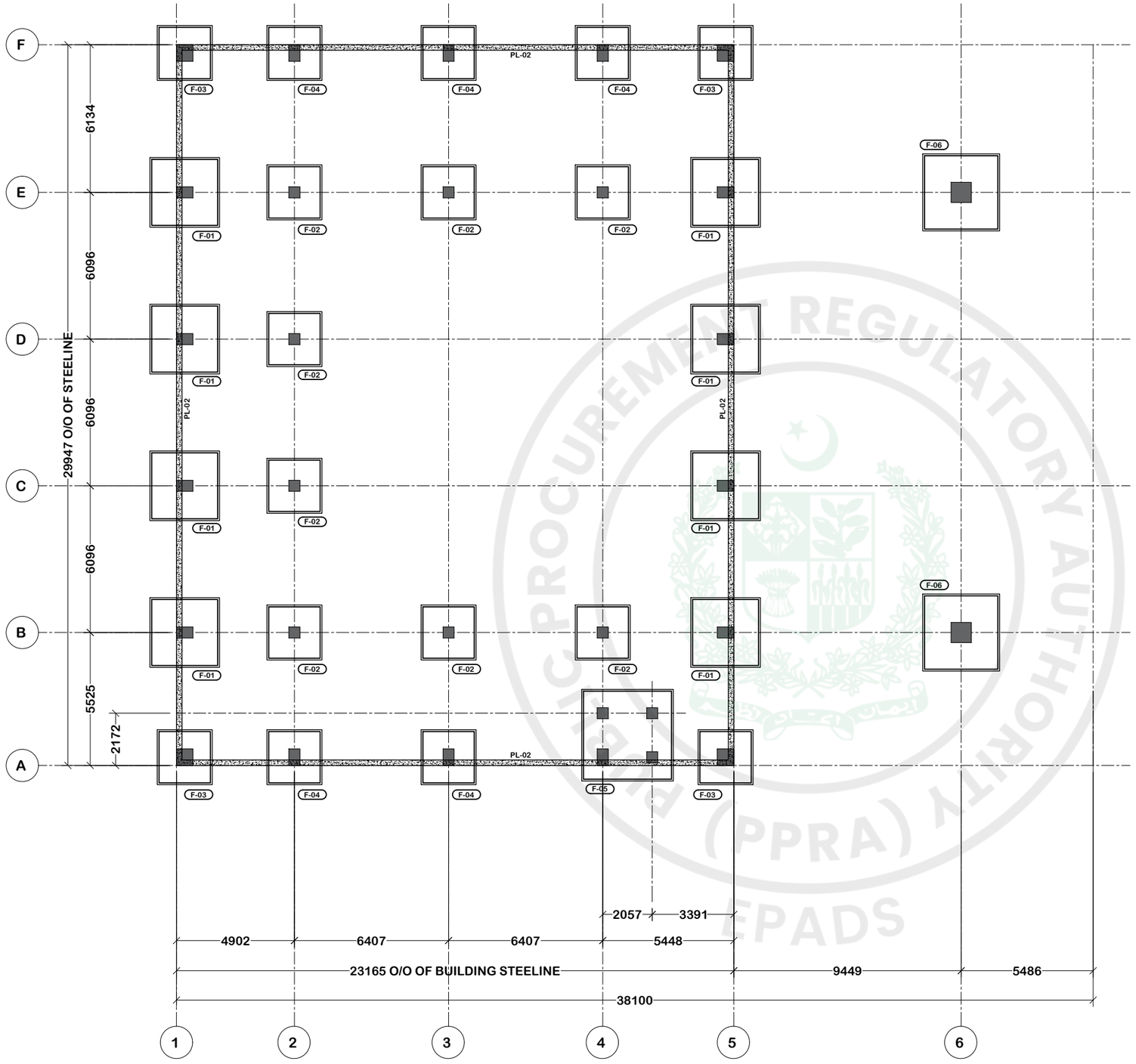

FOOTING LAYOUT PLAN

GRAVITY ENGINEERING SERVICES	PROJECT: CDA ONE WINDOW	CONSULTANT: ---	DRAWING TITLE: FOOTING LAYOUT PLAN	DRAWING NO: GQN-0784-ST03-R00		S.NO.	REVISION DESCRIPTION.	REV. NO.	DATE:
	CLIENT: CDA	CONTRACTOR: ---	LOCATION: ISLAMABAD	SCALE: N.T.S	DATE: 13-09-2026	1	ISSUED FOR CONSTRUCTION	R00	13-09-2026
				DRAWN BY: ASD	DESIGN BY: TFL	2			
						3			
						4			

PUBLIC PROCUREMENT REGULATORY AUTHORITY (PPRA) EPADS

O/O = OUT TO OUT
C/C = CENTER TO CENTER
C/O = CENTER OF
S.L = STEEL LINE
G.L = GRID LINE
C.L = CENTER LINE

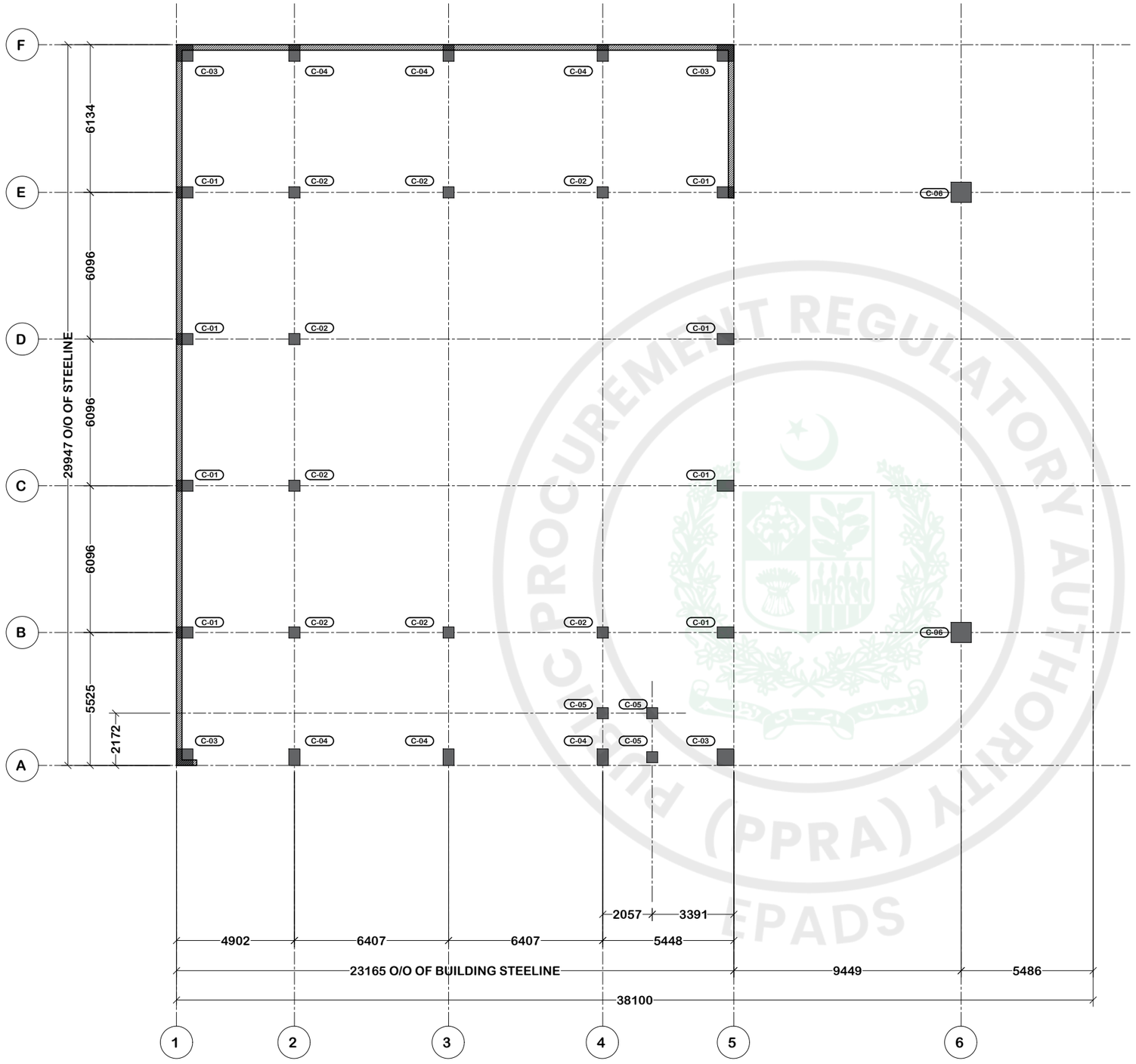

COLUMN LAYOUT PLAN

GRAVITY ENGINEERING SERVICES	PROJECT: CDA ONE WINDOW	CONSULTANT: ---	DRAWING TITLE: COLUMN LAYOUT PLAN	DRAWING NO: GQN-0784-ST04-R00		S.NO.	REVISION DESCRIPTION. / REV. NO. / DATE:
	CLIENT: CDA	CONTRACTOR: ---	LOCATION: ISLAMABAD	SCALE: N.T.S	DATE: 13-09-2026	1	ISSUED FOR CONSTRUCTION / R00 / 13-09-2026
				DRAWN BY: ASD	DESIGN BY: TFL	2	
						3	
						4	

e-Pak Acquisition and Disposal System (EPADS) generated document | © 2026

O/O = OUT TO OUT
C/C = CENTER TO CENTER
C/O = CENTER OF
S.L = STEEL LINE
G.L = GRID LINE
C.L = CENTER LINE

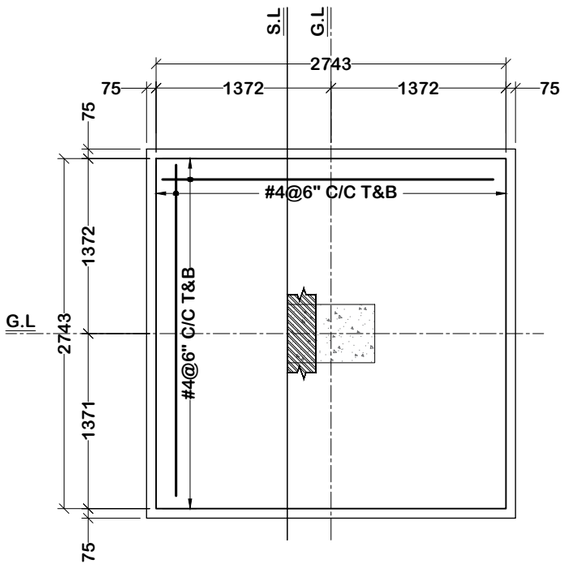

FOOTING F-1 PLAN VIEW

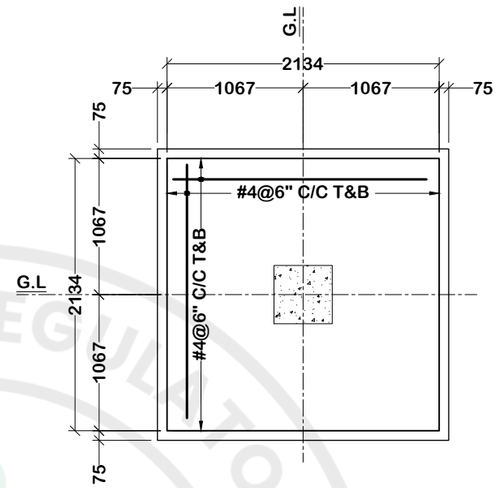

FOOTING F-2 PLAN VIEW

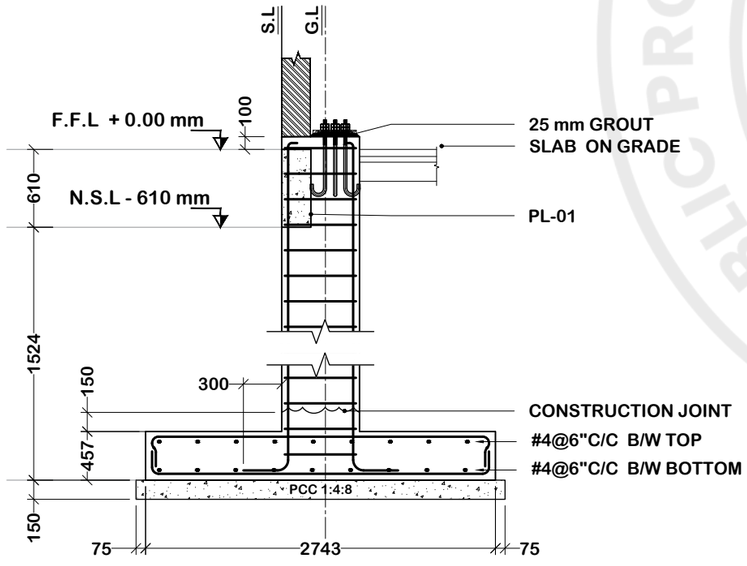

SECTION FOOTING F-01

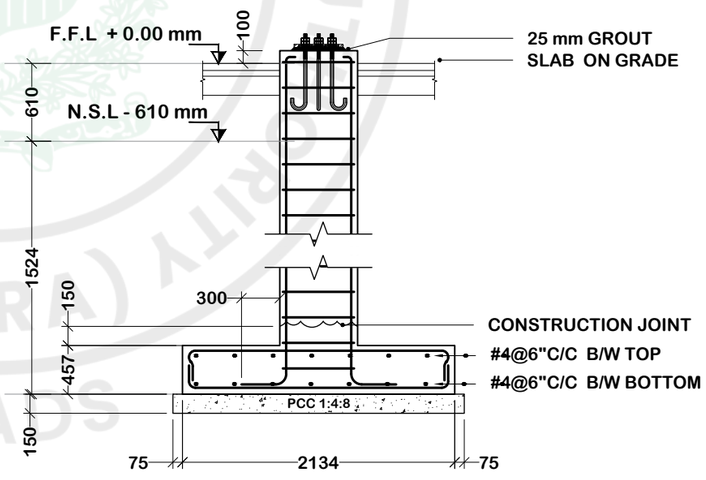

SECTION FOOTING F-02

GRAVITY ENGINEERING SERVICES	PROJECT: CDA ONE WINDOW	CONSULTANT: ---	DRAWING TITLE: FOOTING DETAILS - I	DRAWING NO: GQN-0784-ST05-R00		S.NO.	REVISION DESCRIPTION. / REV. NO. / DATE:
	CLIENT: CDA	CONTRACTOR: ---	LOCATION: ISLAMABAD	SCALE: N.T.S	DATE: 13-09-2026	1	ISSUED FOR CONSTRUCTION / R00 / 13-09-2026
				DRAWN BY: ASD	DESIGN BY: TFL	2	
						3	
						4	

e-Pak Acquisition and Disposal System (EPADS) generated document | © 2026

O/O = OUT TO OUT
C/C = CENTER TO CENTER
C/O = CENTER OF
S.L = STEEL LINE
G.L = GRID LINE
C.L = CENTER LINE

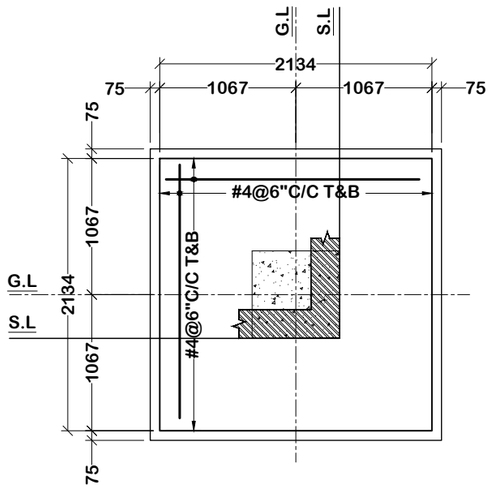

FOOTING F-3 PLAN VIEW

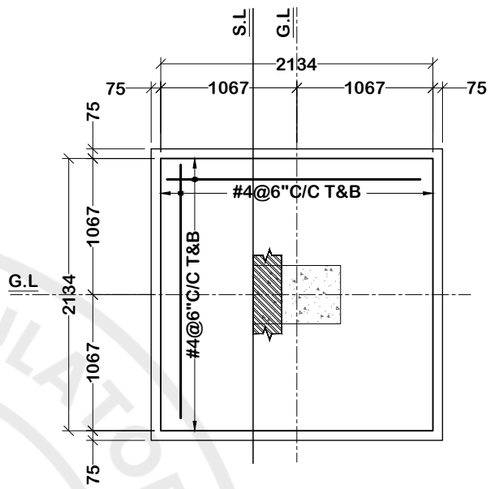

FOOTING F-4 PLAN VIEW

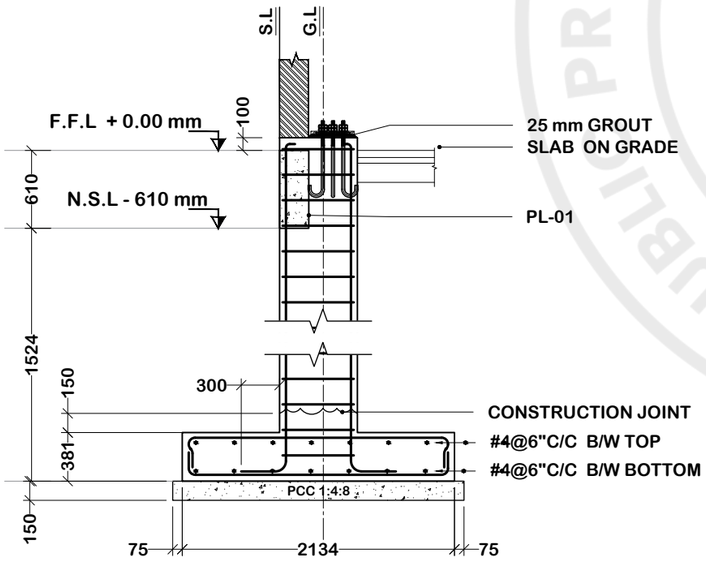

SECTION FOOTING F-03

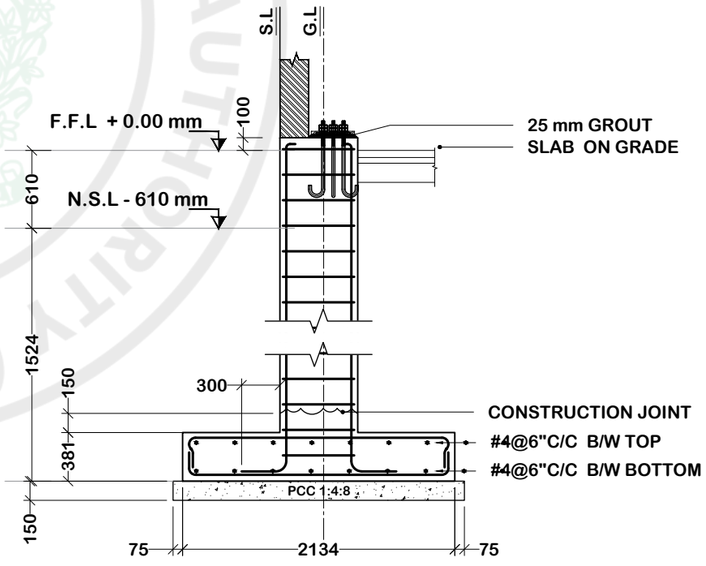

SECTION FOOTING F-04

GRAVITY ENGINEERING SERVICES	PROJECT: CDA ONE WINDOW	CONSULTANT: ---	DRAWING TITLE: FOOTING DETAILS - II	DRAWING NO: GQN-0784-ST06-R00		S.NO.	REVISION DESCRIPTION. / REV. NO. / DATE:
	CLIENT: CDA	CONTRACTOR: ---	LOCATION: ISLAMABAD	SCALE: N.T.S	DATE: 13-09-2026	1	ISSUED FOR CONSTRUCTION / R00 / 13-09-2026
				DRAWN BY: ASD	DESIGN BY: TFL	2	
						3	
						4	

e-Pak Acquisition and Disposal System (EPADS) generated document | © 2026

O/O = OUT TO OUT
C/C = CENTER TO CENTER
C/O = CENTER OF
S.L = STEEL LINE
G.L = GRID LINE
C.L = CENTER LINE

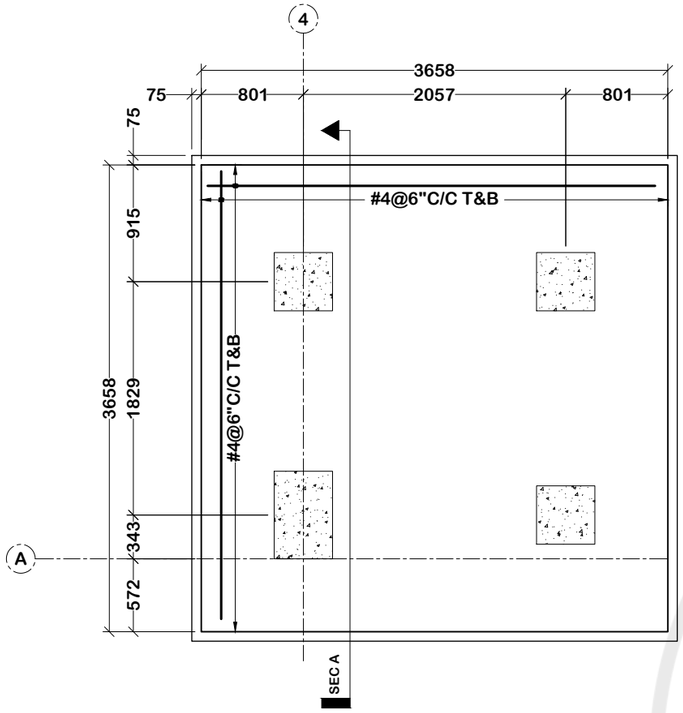

FOOTING F-5 PLAN VIEW

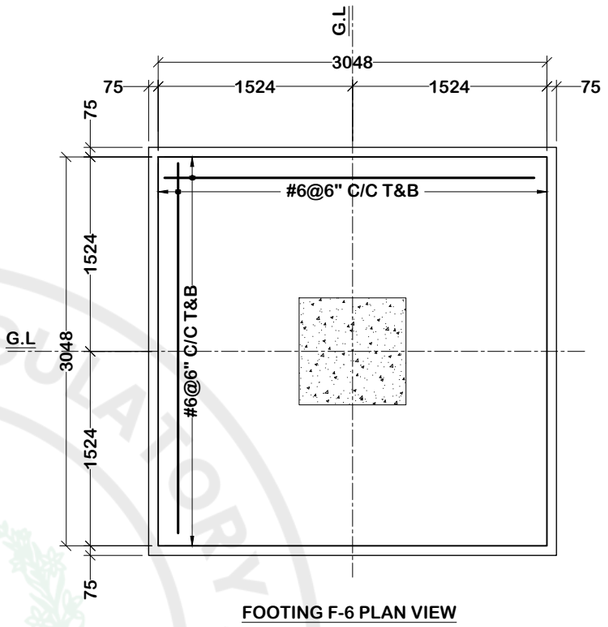

FOOTING F-6 PLAN VIEW

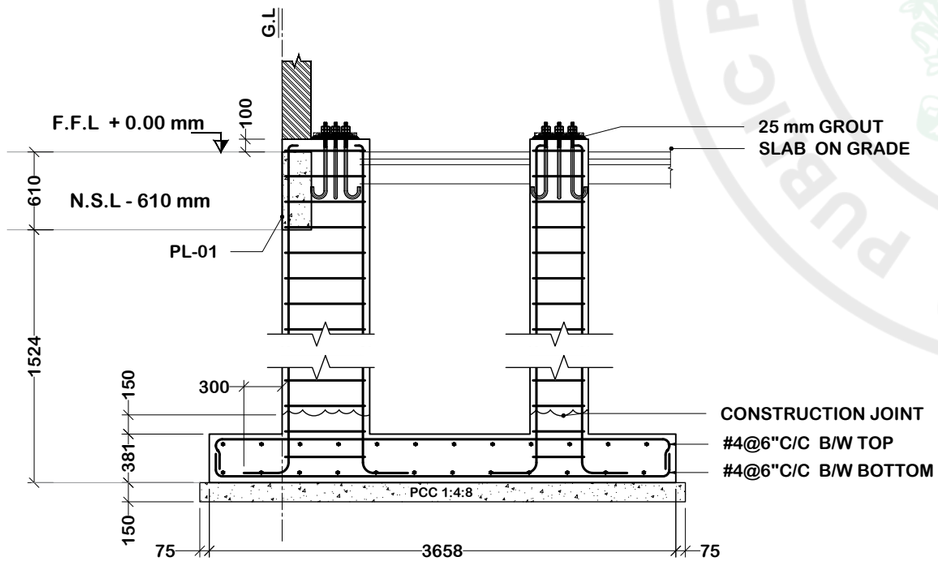

SECTION FOOTING F-05

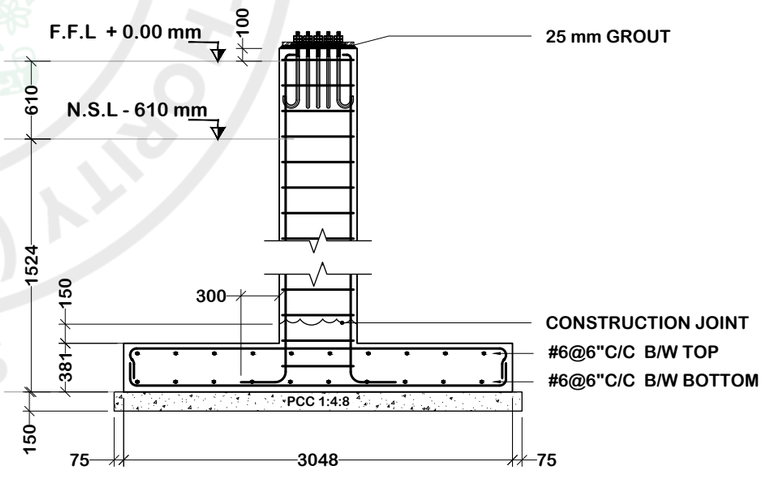

SECTION FOOTING F-06

GRAVITY ENGINEERING SERVICES	PROJECT: CDA ONE WINDOW	CONSULTANT: ---	DRAWING TITLE: FOOTING DETAILS - III	DRAWING NO: GQN-0784-ST07-R00		S.NO.	REVISION DESCRIPTION. / REV. NO. / DATE:
	CLIENT: CDA	CONTRACTOR: ---	LOCATION: ISLAMABAD	SCALE: N.T.S	DATE: 13-09-2026	1	ISSUED FOR CONSTRUCTION / R00 / 13-09-2026
				DRAWN BY: ASD	DESIGN BY: TFL	2	
						3	
						4	

e-Pak Acquisition and Disposal System (EPADS) generated document | © 2026

O/O = OUT TO OUT
C/C = CENTER TO CENTER
C/O = CENTER OF
S.L = STEEL LINE
G.L = GRID LINE
C.L = CENTER LINE

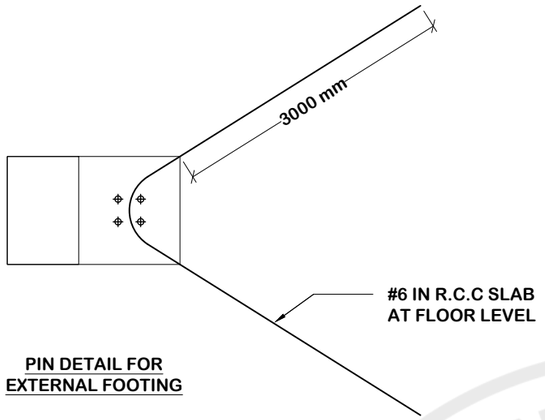

PIN DETAIL FOR
EXTERNAL FOOTING

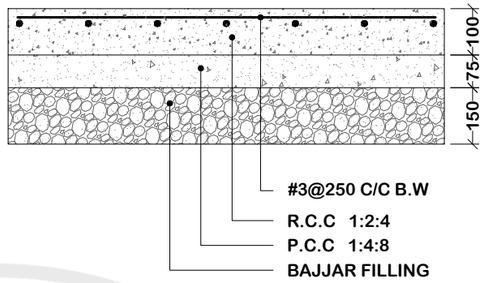

SLAB ON GRADE DETAIL

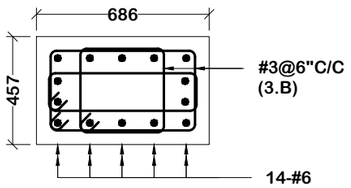

COLUMN C-01 DETAIL

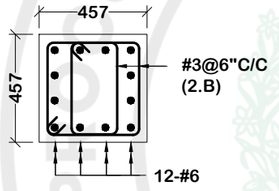

COLUMN C-02 DETAIL

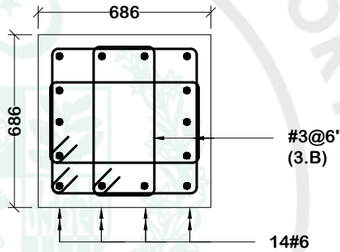

COLUMN C-03 DETAIL

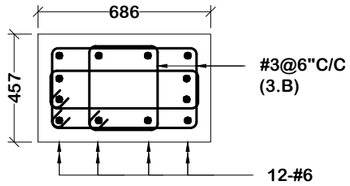

COLUMN C-04 DETAIL

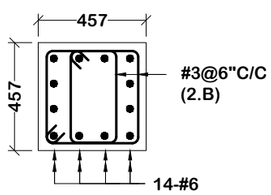

COLUMN C-05 DETAIL

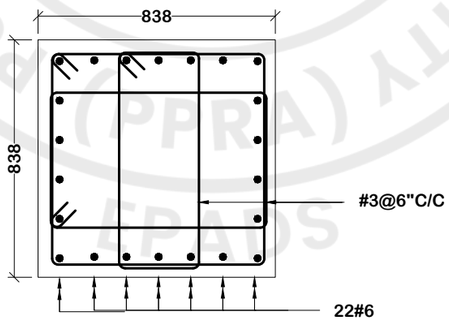

COLUMN C-06 DETAIL

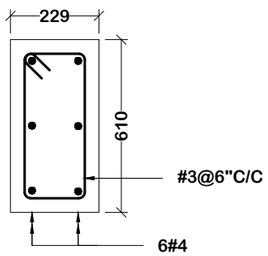

PLINTH PL-01 DETAIL

GRAVITY ENGINEERING SERVICES	PROJECT: CDA ONE WINDOW	CONSULTANT: ---	DRAWING TITLE: COLUMN DETAILS	DRAWING NO: GQN-0784-ST08-R00			
	CLIENT: CDA	CONTRACTOR: ---	LOCATION: ISLAMABAD	SCALE: N.T.S	DATE: 13-09-2026		
				DRAWN BY: ASD	DESIGN BY: TFL		

S.NO.	REVISION DESCRIPTION.	REV. NO.	DATE:
1	ISSUED FOR CONSTRUCTION	R00	13-09-2026
2			
3			
4			

e-Pak Acquisition and Disposal System (EPADS) generated document | © 2026

STEEL STRUCTURE DRAWINGS

PUBLIC PROCUREMENT REGULATORY AUTHORITY (PPRA) EPADS

GRAVITY
ENGINEERING SERVICES

PROJECT: CDA ONE WINDOW	CONSULTANT: ---	DRAWING TITLE: STEEL STR. DRAWINGS	DRAWING NO: GQN-0784-ST09-R00
CLIENT: CDA	CONTRACTOR: ---	LOCATION: ISLAMABAD	SCALE: N.T.S / DATE: 13-09-2026 / DRAWN BY: ASD / DESIGN BY: TFL

S.NO.	REVISION DESCRIPTION.	REV. NO.	DATE:
1	ISSUED FOR CONSTRUCTION	R00	13-09-2026
2			
3			
4			

GENERAL NOTES
(MILD STEEL / STRUCTURAL STEEL WORKS)

1. NOTES GIVEN IN THIS DRAWING ARE APPLICABLE TO ALL DRAWINGS U.N.O.

2. ALL LEVELS & DIMENSIONS ARE IN MILLIMETERS (MM) U.N.O.

3. READ ALL DRAWINGS IN CONJUNCTION WITH RELEVANT ARCHITECTURAL, CIVIL, MECHANICAL, ELECTRICAL & OTHER RELEVANT DRAWINGS.

4. DO NOT SCALE THE DRAWINGS. DIMENSIONS WRITTEN ON THE DRAWINGS GOVERN.

5. THE CONTRACTOR SHALL CHECK & VERIFY ALL DIMENSIONS WITH RELEVANT DRAWINGS BEFORE PREPARING SHOP DRAWINGS, FABRICATION OR CONSTRUCTION. ANY DISCREPANCY SHALL BE BROUGHT TO THE NOTICE OF THE ENGINEER.

6. FOR SAFETY RULES & REGULATIONS FOLLOW RELEVANT SAFETY CODES & STANDARDS. THE CONTRACTOR SHALL BE RESPONSIBLE FOR THE SAFETY OF THE STRUCTURE DURING CONSTRUCTION.

7. MATERIAL & CONSTRUCTION SPECIFICATIONS SHALL CONFORM TO AISC, AWS AND RELEVANT ASTM CODES.

8. ALL STEEL FABRICATION SHALL BE IN ACCORDANCE WITH STANDARD SPECIFICATIONS.

9. DURING ERECTION ALL WORK SHALL BE SECURELY FASTENED TO TAKE CARE OF DEAD LOAD, WIND & ERECTION STREXYZES. SUFFICIENT TEMPORARY SUPPORTS, BRACING & SHORING SHALL BE PROVIDED BY THE CONTRACTOR.

10. COLUMN BASES & SPLICE JOINTS SHALL BE MACHINED SQUARE TO ACHIEVE FULL BEARING.

11. SUBSTITUTION OF SECTIONS OF EQUIVALENT STRENGTH & PROPERTIES WILL BE PERMITTED ONLY WITH WRITTEN APPROVAL OF THE ENGINEER.

12. GROUT SHALL BE NON-SHRINK CEMENTITIOUS NON-METALLIC GROUT APPLIED AS PER MANUFACTURER'S DIRECTIONS.

13. ALL EXPOSED WELDS SHALL BE CLEANED TO REMOVE FLUX, SLAG & SPATTER PRIOR TO PAINT.

14. EXPOSED STEEL SHALL BE KEPT FREE OF GREASE, OIL, DIRT & FOREIGN MATTER PRIOR TO PAINTING.

15. DO NOT PRIME PAINT WITHIN 75 mm OF AREAS WHERE FIELD WELDS WILL OCCUR.

16. AFTER ERECTION ALL FIELD CONNECTIONS INCLUDING WELDS, BOLTS & ABRADED SURFACES SHALL BE TOUCHED UP WITH PRIMER.

17. GALVANIZED SURFACES DAMAGED DURING HANDLING OR ERECTION SHALL BE REPAIRED WITH COLD GALVANIZING COMPOUND.

18. ANCHOR BOLTS SHALL CONFORM TO RELEVANT ASTM STANDARDS U.N.O.

19. ALL WELDING SHALL BE DONE IN ACCORDANCE WITH AWS D1.1. ELECTRODES SHALL BE E70XX LOW HYDROGEN TYPE.

20. WELDING SHALL CONFORM TO DIMENSIONAL TOLERANCES RECOMMENDED IN AWS D1.1.

21. NON-DESTRUCTIVE TESTING OF WELDS SHALL BE PERFORMED WHERE SPECIFIED. 100% VISUAL INSPECTION SHALL BE CARRIED OUT FOR ALL WELDS.

Material Specifications (ASTM A36)

SR. NO.	Structural Components		Material Specification	Strength
1	Built-up Sections		ASTM A50	F_y=345MPa
2	Hot Rolled Sections	Tubes	ASTM A36	F_y=250MPa
3		I-sections	ASTM A36	F_y=250MPa
4		Channels	ASTM A36	F_y=250MPa
5	Cold formed secondary members		ASTM A653M SS GRADE 340 COATING Z275	F_y=345MPa
6	Sheeting Panels		ASTM A792 M, COATING AZ150	F_y=345MPa
7	Mezzanine Decking Panels		ASTM A653M SS GRADE 340 COATING Z275	F_y=345MPa
8	DIAGONAL X-BRACING	Rods	ASTM A36	F_y=250MPa
9		HR Angles	ASTM A36	F_y=250MPa
10		CABLE	ASTM A475 - EXTRA HIGH STRENGTH CLASS A	
11	Anchor Bolts		ASTM F 1554 Grade 36 OR Din 933 Grade 4.6 Hot Dip Galvanized to A153 Class C or equivalent	F_y=250MPa
12	High Strength Bolts		Din 933 Grade 8.8 or equivalent.(Fully Threaded) Hot Dip Galvanized to BS 729	F_y=630MPa (F_u=800MPa)
13	Sag Rods		ASTM A36 OR Din 933 Grade 4.6 Electro galvanized to B633	F_y=250MPa
14	Self-Drilling Fasteners		High Grade Carbon Steel With Washers And EPDM seal	
15	Self-Drilling Fasteners		Small Headed Pin With An Expandable shank For Fixing Gutters	

NOTES:
F_y=Yield Strength F_u=Ultimate Tensile Strength P_u=Minimum Breaking Loads
Material With Above Or Equivalent Specifications Could Be Supplied Depending Upon The Source Availability

PROCUREMENT REGULATORY AUTHORITY (PPRA) EPADS

GRAVITY ENGINEERING SERVICES

PROJECT: CDA ONE WINDOW	CONSULTANT: ---	DRAWING TITLE: GENERAL NOTES	DRAWING NO: GQN-0784-ST10-R00
CLIENT: CDA	CONTRACTOR: ---	LOCATION: ISLAMABAD	SCALE: N.T.S / DATE: 13-09-2026 / DRAWN BY: ASD / DESIGN BY: TFL

S.NO.	REVISION DESCRIPTION.	REV. NO.	DATE:
1	ISSUED FOR CONSTRUCTION	R00	13-09-2026
2			
3			
4			

NOTE:
1. ALL DIMENSIONS ARE EXPRESSED IN MILLIMETERS UNLESS NOTED.
2. THESE DRAWINGS TO BE READ IN CONJUNCTION WITH THE DWG NO. ST-02 & ST-03 .

O/O = OUT TO OUT
C/C = CENTER TO CENTER
C/O = CENTER OF
S.L = STEEL LINE
G.L = GRID LINE
C.L = CENTER LINE

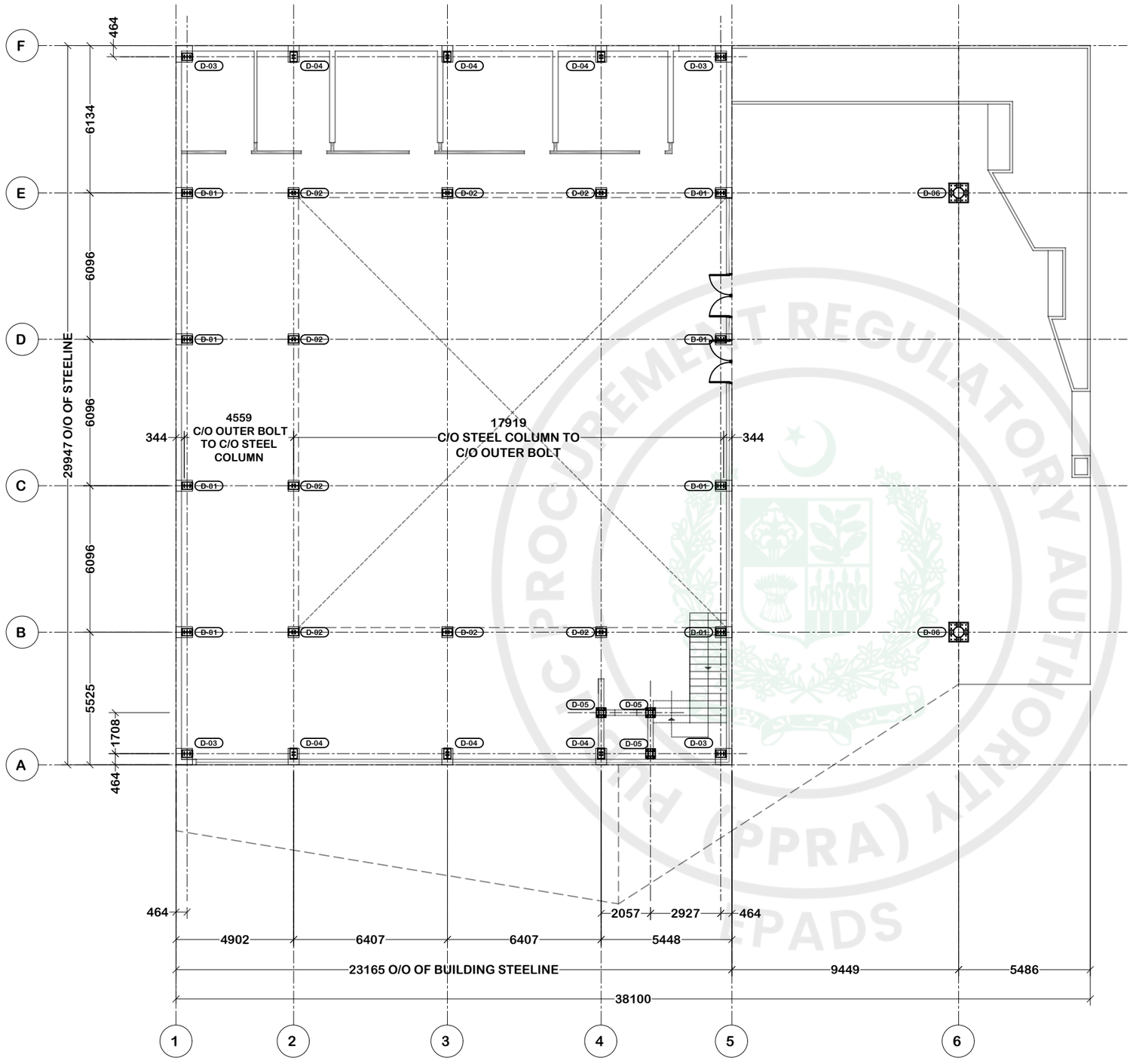

ANCHOR BOLT PLAN

ALL BASE PLATES LEVEL = +100

GRAVITY ENGINEERING SERVICES

PROJECT: CDA ONE WINDOW	CONSULTANT: ---	DRAWING TITLE: ANCHOR BOLT PLAN	DRAWING NO: GQN-0784-ST11-R00
CLIENT: CDA	CONTRACTOR: ---	LOCATION: ISLAMABAD	SCALE: N.T.S / DATE: 13-09-2026 / DRAWN BY: ASD / DESIGN BY: TFL

S.NO.	REVISION DESCRIPTION.	REV. NO.	DATE:
1	ISSUED FOR CONSTRUCTION	R00	13-09-2026
2			
3			
4			

e-Pak Acquisition and Disposal System (EPADS) generated document | © 2026

BOLT SIZE	20 mm
NO OF BOLTS	4 no.
BASEPLATE THICKNESS	20 mm

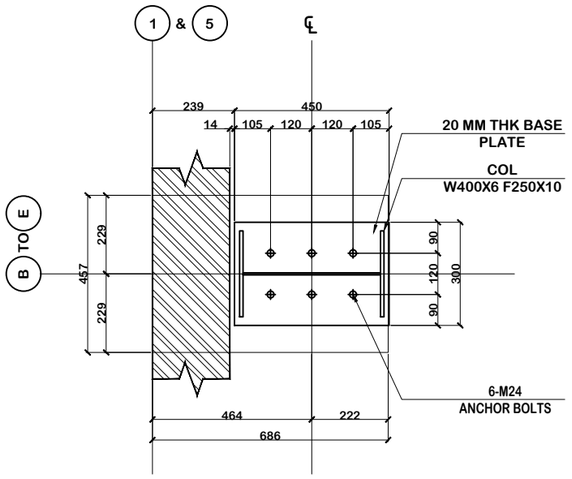

BASEPLATE DETAIL D-01
B.O.B = +100 mm

BOLT SIZE	24 mm
NO OF BOLTS	4 no.
BASEPLATE THICKNESS	20 mm

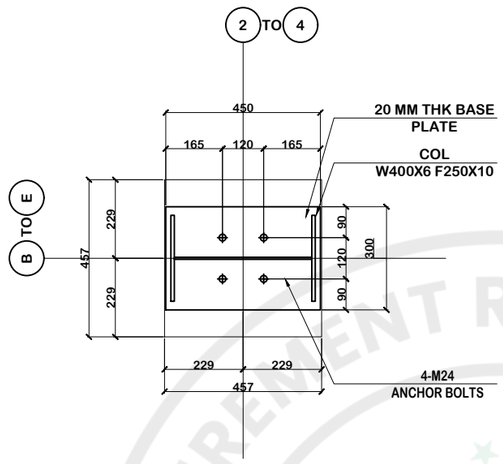

BASEPLATE DETAIL D-02
B.O.B = +100 mm

BOLT SIZE	24 mm
NO OF BOLTS	6 no.
BASEPLATE THICKNESS	20 mm

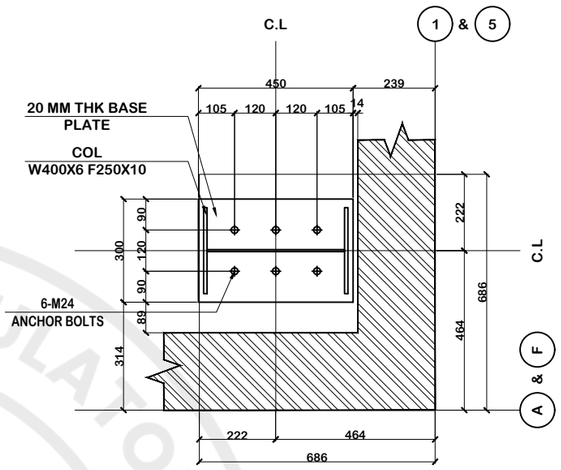

BASEPLATE DETAIL D-03
B.O.B = +100 mm

BOLT SIZE	24 mm
NO OF BOLTS	4 no.
BASEPLATE THICKNESS	20 mm

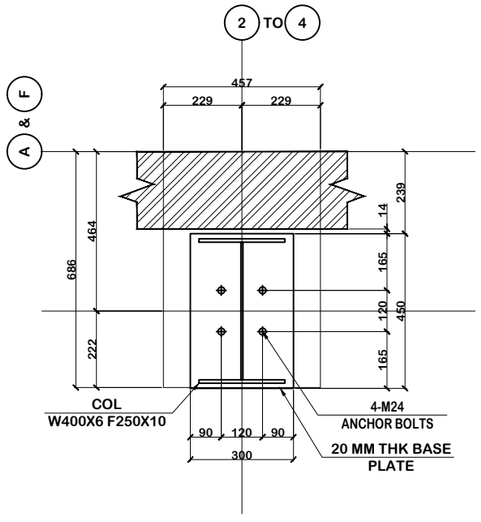

BASEPLATE DETAIL D-04
B.O.B = +100 mm

BOLT SIZE	24 mm
NO OF BOLTS	6 no.
BASEPLATE THICKNESS	20 mm

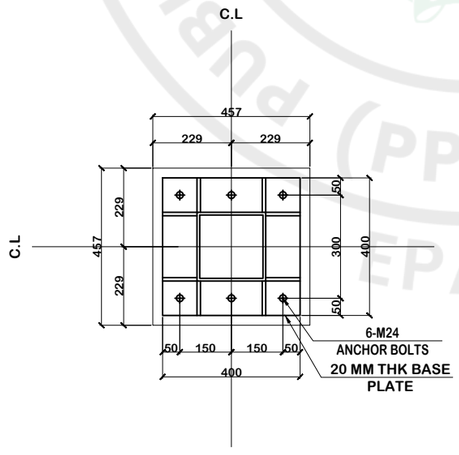

BASEPLATE DETAIL D-05
B.O.B = +100 mm

BOLT SIZE	24 mm
NO OF BOLTS	16 no.
BASEPLATE THICKNESS	25 mm

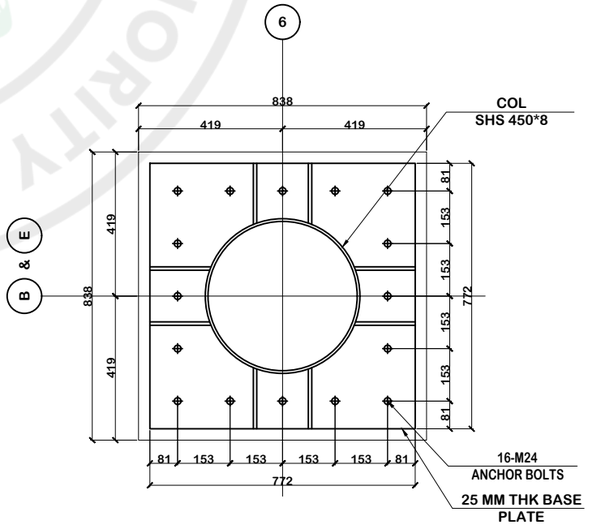

BASEPLATE DETAIL D-06
B.O.B = +100 mm

Notes:

1. GES assumes no responsibility or liability for the foundation design or construction. Foundations should be designed as a minimum for the given reaction loads.
2. Unless noted, anchor bolts should be set perpendicular to the theoretical bearing surface. Anchor bolt threads should be protected during concreting operation and thoroughly cleaned after pouring. All templates should be removed.
3. The customer / client is responsible for accurate locations of grid lines, levels and bench marks at
4. The installation of anchor bolts and embedded items must be done as per the following allowable tolerances:

a. 3mm center to center of any two bolts within an anchor bolt group.

A. 6mm center to center of adjacent anchor bolt groups.

B. Elevation of the top of anchor bolts +/- 12mm.

C. Maximum accumulation of 6mm per 30 meters along the established column line of multiple anchor bolt groups but not to exceed a total of 25mm.

D. 6mm from the center of any anchor bolt group to the established column line through that group.

E. The tolerances of paragraphs b, c and d apply to offset dimensions shown on the plans, measured parallel and perpendicular to the nearest established column line for individual columns shown on the plans to be offset from established column line. Variation beyond these tolerance shall result in imperfections in final look of building. For example, gap between splices, out of plumb columns, misaligned trims and leakage etc. GES shall not be responsible for all such flaws due to inaccuracy in civil works.

5. Anchor bolts should be set by the customer / client (or his civil contractor) in accordance with the "issued for construction" anchor bolt layout plan. GES supervisor will visit & inspect the site at the time of anchor bolt
6. Template (if required) is to match the base plate sketch provided here. (template shall be required for each non-identical "hole pattern"). Thickness 4mm. Qty. 01no.
7. All dimensions are expressed in millimeters unless noted.
8. These drawings to be read in conjunction with the dwg. No. ST-11, ST-12, ST-13

GRAVITY
ENGINEERING SERVICES

PROJECT: CDA ONE WINDOW	CONSULTANT: ---	DRAWING TITLE: ANCHOR BOLT DETAIL	DRAWING NO: GQN-0784-ST12-R00
CLIENT: CDA	CONTRACTOR: ---	LOCATION: ISLAMABAD	SCALE: N.T.S / DATE: 13-09-2026 / DRAWN BY: ASD / DESIGN BY: TFL

S.NO.	REVISION DESCRIPTION.	REV. NO.	DATE:
1	ISSUED FOR CONSTRUCTION	R00	13-09-2026
2			
3			
4			

e-Pak Acquisition and Disposal System (EPADS) generated document | © 2026

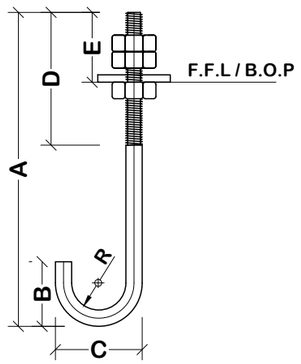

ANCHOR BOLT ASSEMBLY.

EACH ASSEMBLY CONSISTS OF ONE 'J' SHAPED ANCHOR BOLT, 3nos. HEX NUTS, 2no. WASHER

DIMENSIONAL PROPERTIES

BOLT			A	B	C	D	E	R	TOTAL STRAIGHT LENGTH	EMBEDMENT STRAIGHT LENGTH
QTY.	NOMINAL DIAMETER	THREAD PITCH	(mm)	(mm)	(mm)	(mm)	(mm)	(mm)	(mm)	(mm)
---	M16	2.50	500	110	100	200	125	30	636	561
---	M20	2.50	500	110	100	200	125	30	636	561
---	M24	3.00	600	140	128	200	125	40	775	700

ANCHOR BOLT DETAIL

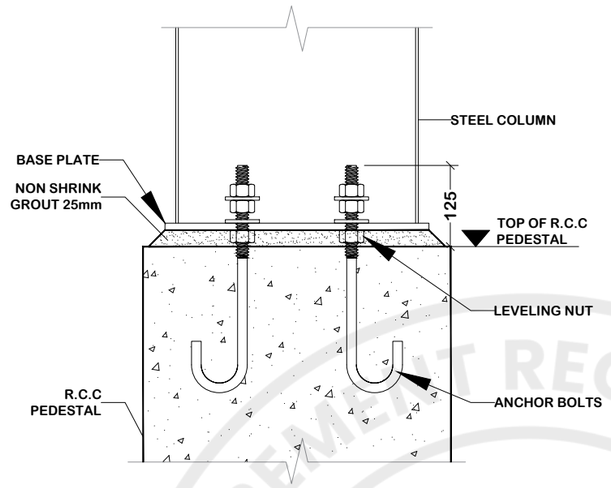

ANCHOR BOLT POURING DETAIL

Notes:

1. GES assumes no responsibility or liability for the foundation design or construction. Foundations should be designed as a minimum for the given reaction loads.
2. Unless noted, anchor bolts should be set perpendicular to the theoretical bearing surface. Anchor bolt threads should be protected during concreting operation and thoroughly cleaned after pouring. All templates should be removed.
3. The customer / client is responsible for accurate locations of grid lines, levels and bench marks at
4. The installation of anchor bolts and embedded items must be done as per the following allowable tolerances:

a. 3mm center to center of any two bolts within an anchor bolt group.

A. 6mm center to center of adjacent anchor bolt groups.

B. Elevation of the top of anchor bolts +/- 12mm.

C. Maximum accumulation of 6mm per 30 meters along the established column line of multiple anchor bolt groups but not to exceed a total of 25mm.

D. 6mm from the center of any anchor bolt group to the established column line through that group.

E. The tolerances of paragraphs b, c and d apply to offset dimensions shown on the plans, measured parallel and perpendicular to the nearest established column line for individual columns shown on the plans to be offset from established column line. Variation beyond these tolerance shall result in imperfections in final look of building. For example, gap between splices, out of plumb columns, misaligned trims and leakage etc. GES shall not be responsible for all such flaws due to inaccuracy in civil works.

5. Anchor bolts should be set by the customer / client (or his civil contractor) in accordance with the "issued for construction" anchor bolt layout plan. GES supervisor will visit & inspect the site at the time of anchor bolt
6. Template (if required) is to match the base plate sketch provided here. (template shall be required for each non-identical "hole pattern"). Thickness 4mm. Qty. 01no.
7. All dimensions are expressed in millimeters unless noted.
8. These drawings to be read in conjunction with the dwg. No. ST-11, ST-12, ST-13

PUBLIC PROCUREMENT REGULATORY AUTHORITY (PPRA) EPADS

GRAVITY ENGINEERING SERVICES

PROJECT: CDA ONE WINDOW	CONSULTANT: ---	DRAWING TITLE: ANCHOR BOLT DETAIL	DRAWING NO: GQN-0784-ST13-R00
CLIENT: CDA	CONTRACTOR: ---	LOCATION: ISLAMABAD	SCALE: N.T.S / DATE: 13-09-2026 / DRAWN BY: ASD / DESIGN BY: TFL

S.NO.	REVISION DESCRIPTION.	REV. NO.	DATE:
1	ISSUED FOR CONSTRUCTION	R00	13-09-2026
2			
3			
4			

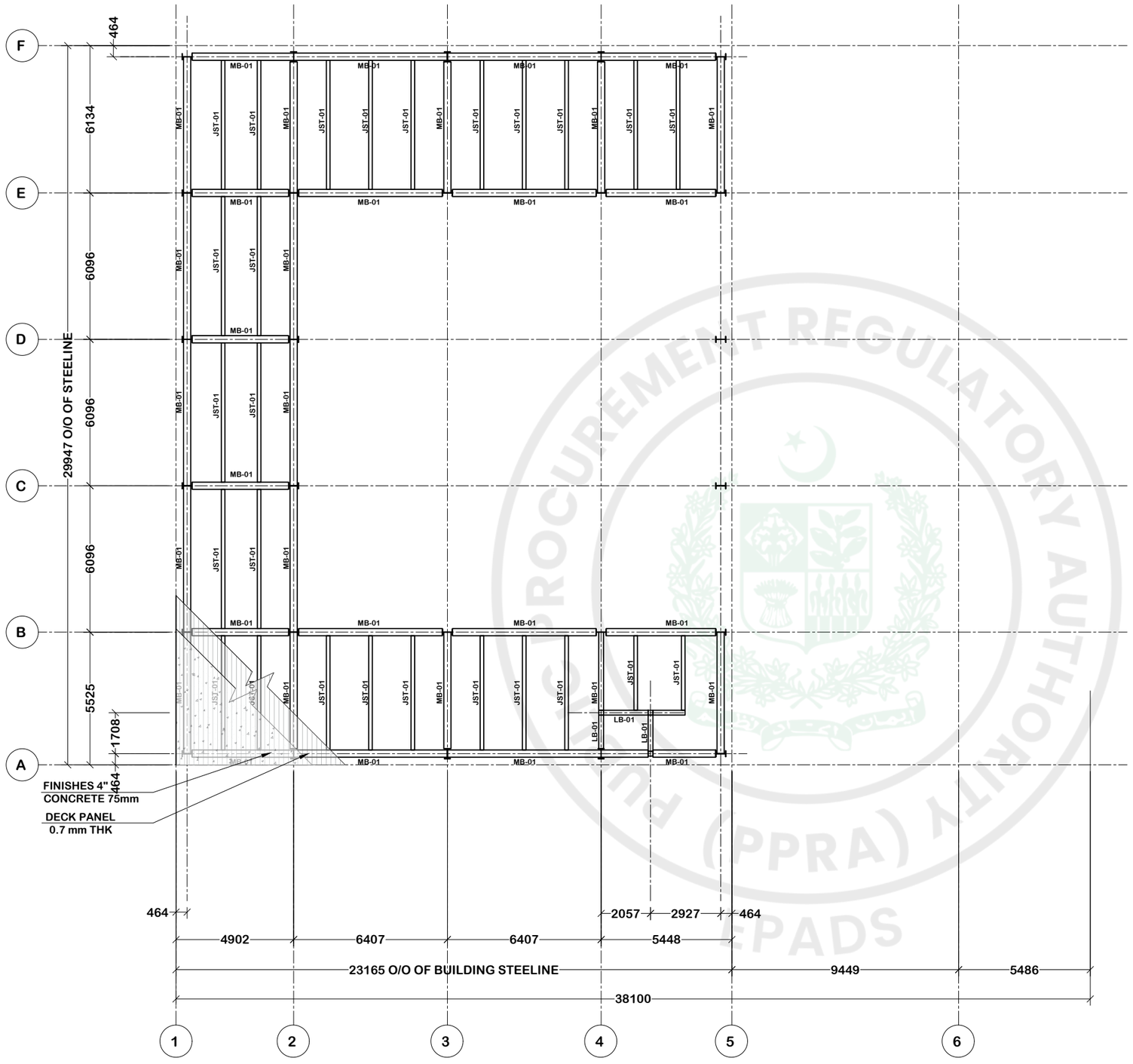

MEZZANINE FLOOR PLAN

FINISH FLOOR LEVEL = +3505

MEMBER TABLE

SR NO.	MARK	WEB DEPTH	WEB PLATE	OUTER FLANGE	INNER FLANGE
		START/END	THICK.	WxTHK	WxTHK
1	COL-1	400-800	6	250x10	250x10
2	P_COL-1	CHS450*8			
3	RFT-1	800-500	6	250x8	250x8
4	RFT-2	500	6	185x8	185x8
5	RFT-3	500	6	185x8	185x8
6	RFT-4	500-800	6	200x10	200x10
7	TRUSS	RHS75*6			

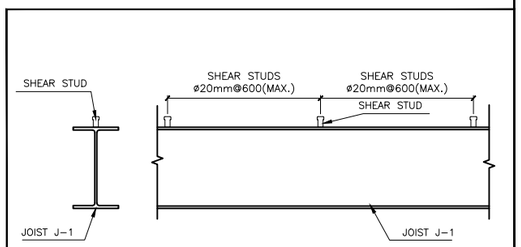

*SHEAR STUD TO BE WELDED WITH SHEAR STUD GUN

SHEAR STUD DETAIL

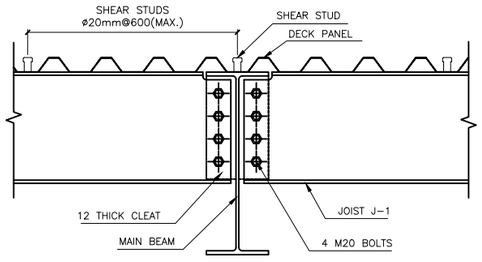

JOIST TO MAIN BEAM CONNECTION

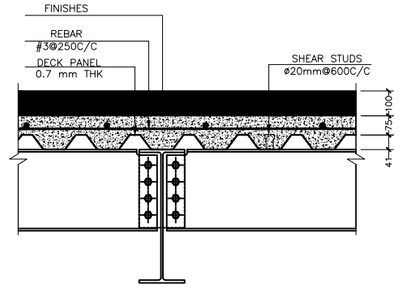

DECK PANEL DETAIL

GRAVITY ENGINEERING SERVICES

PROJECT: CDA ONE WINDOW	CONSULTANT: ---	DRAWING TITLE: MEZZANINE FLOOR PLAN	DRAWING NO: GQN-0784-ST14-R00
CLIENT: CDA	CONTRACTOR: ---	LOCATION: ISLAMABAD	SCALE: N.T.S / DATE: 13-09-2026 / DRAWN BY: ASD / DESIGN BY: TFL

S.NO.	REVISION DESCRIPTION.	REV. NO.	DATE:
1	ISSUED FOR CONSTRUCTION	R00	13-09-2026
2			
3			
4			

e-Pak Acquisition and Disposal System (EPADS) generated document | © 2026

MEMBER TABLE					
SR NO.	MARK	WEB DEPTH	WEB PLATE	OUTER FLANGE	INNER FLANGE
		START/END	THICK.	WxTHK	WxTHK
1	COL-1	400-800	6	250x10	250x10
2	P_COL-1	CHS450*8			
3	RFT-1	800-500	6	250x8	250x8
4	RFT-2	500	6	185x8	185x8
5	RFT-3	500	6	185x8	185x8
6	RFT-4	500-800	6	200x10	200x10
7	TRUSS	RHS75*6			

TYP. FLANGE BRACE

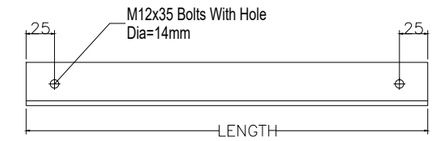

FLANGE BRACE BOTH SIDES

FLANGE BRACE BOTH SIDES

* ALL FLANGE BRACES ANGLES ARE L40x40x4 UNLESS NOTED.

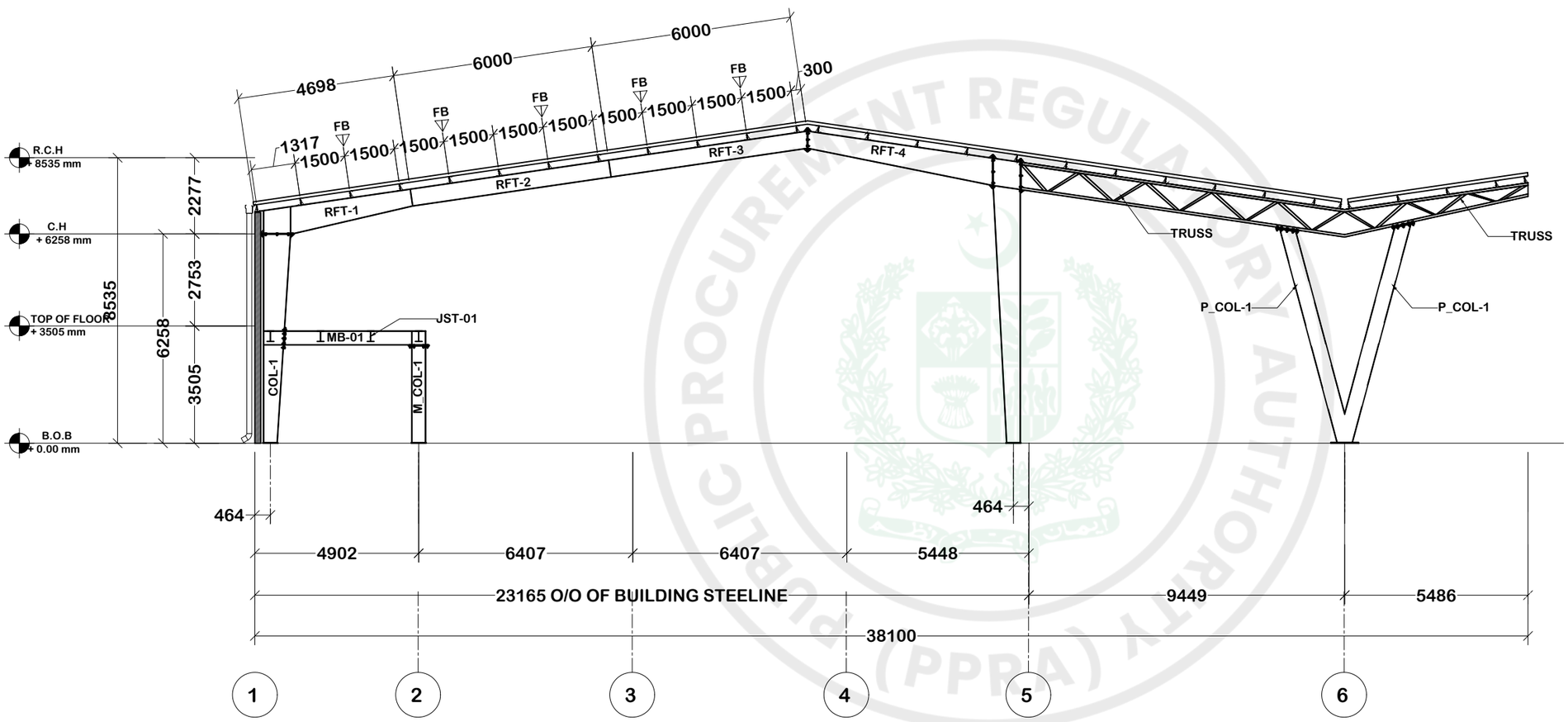

RIGID FRAME ELEVATION

GRAVITY ENGINEERING SERVICES	PROJECT: CDA ONE WINDOW	CONSULTANT: ---	DRAWING TITLE: RIGID FRAME CROSS SEC.	DRAWING NO: GQN-0784-ST15-R00		S.NO.	REVISION DESCRIPTION. / REV. NO. / DATE:
	CLIENT: CDA	CONTRACTOR: ---	LOCATION: ISLAMABAD	SCALE: N.T.S	DATE: 13-09-2026	1	ISSUED FOR CONSTRUCTION / R00 / 13-09-2026
				DRAWN BY: ASD	DESIGN BY: TFL	2	
						3	
						4	

e-Pak Acquisition and Disposal System (EPADS) generated document | © 2026

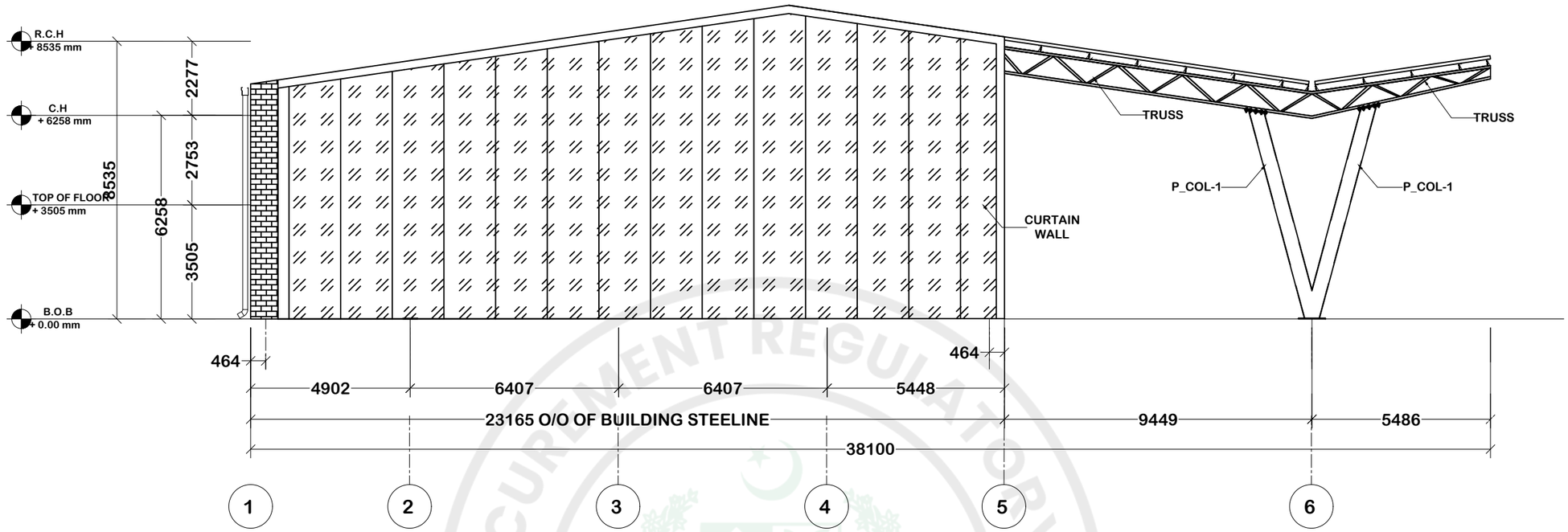

ELEV @ GL A

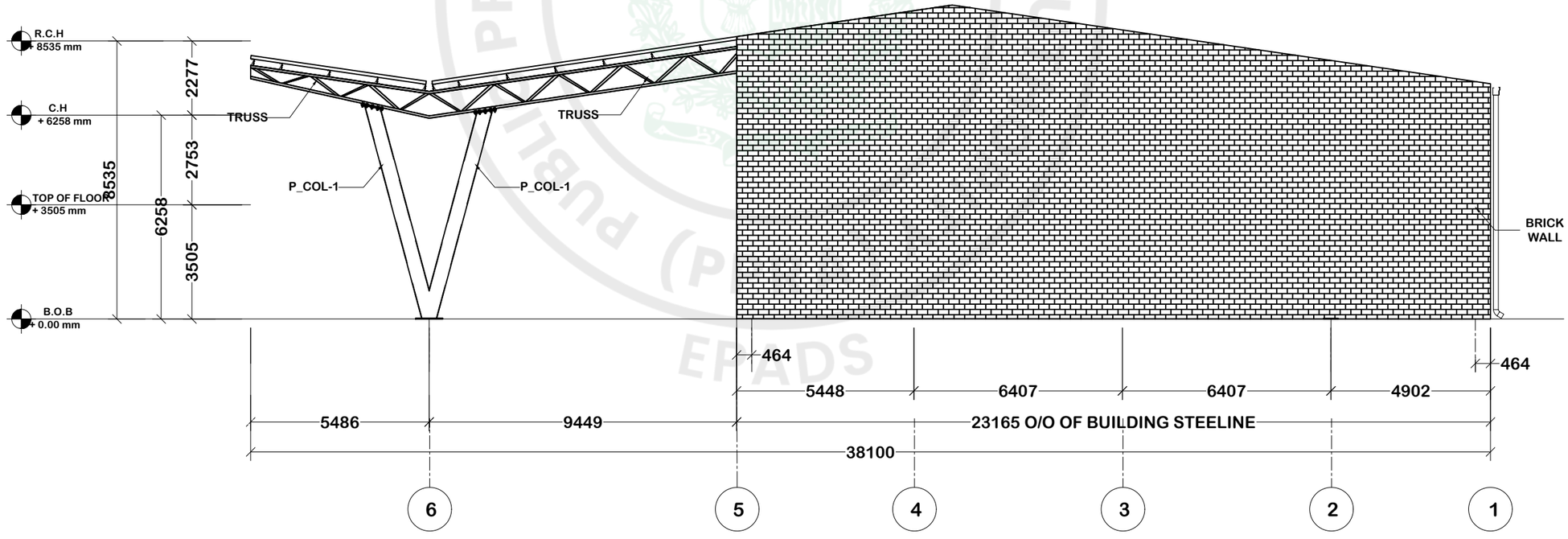

ELEV @ GL F

GRAVITY ENGINEERING SERVICES

PROJECT: CDA ONE WINDOW	CONSULTANT: ---	DRAWING TITLE: END WALL ELEV.	DRAWING NO: GQN-0784-ST16-R00
CLIENT: CDA	CONTRACTOR: ---	LOCATION: ISLAMABAD	SCALE: N.T.S / DATE: 13-09-2026 / DRAWN BY: ASD / DESIGN BY: TFL

S.NO.	REVISION DESCRIPTION.	REV. NO.	DATE:
1	ISSUED FOR CONSTRUCTION	R00	13-09-2026
2			
3			
4			

e-Pak Acquisition and Disposal System (EPADS) generated document | © 2026

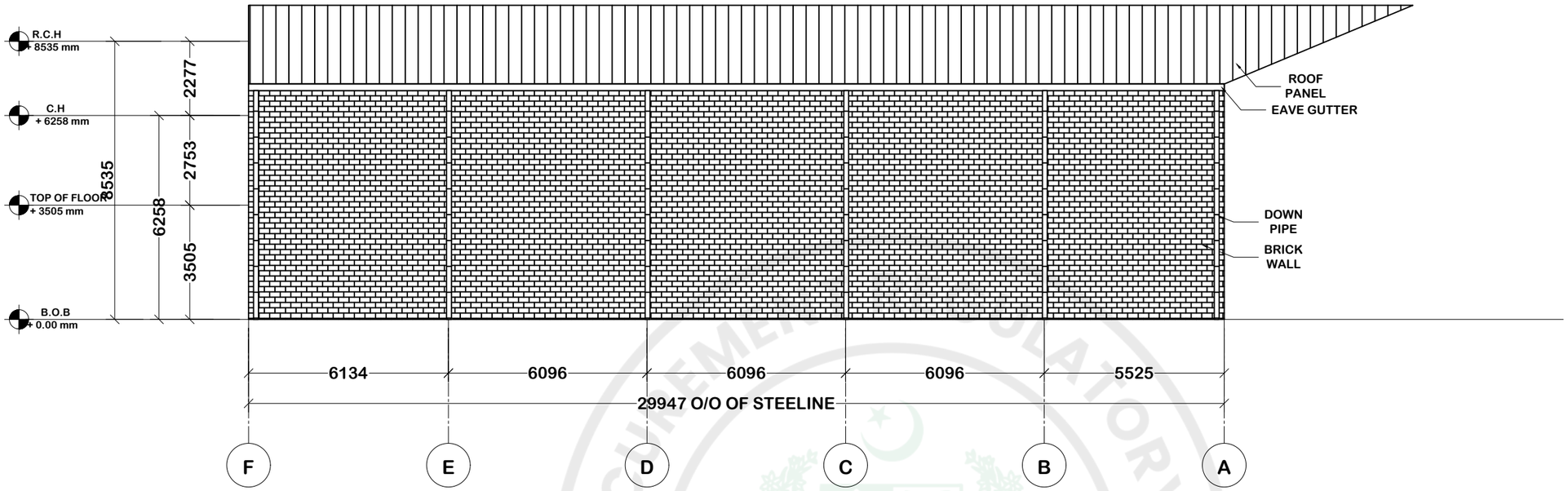

ELEV @ GL 1

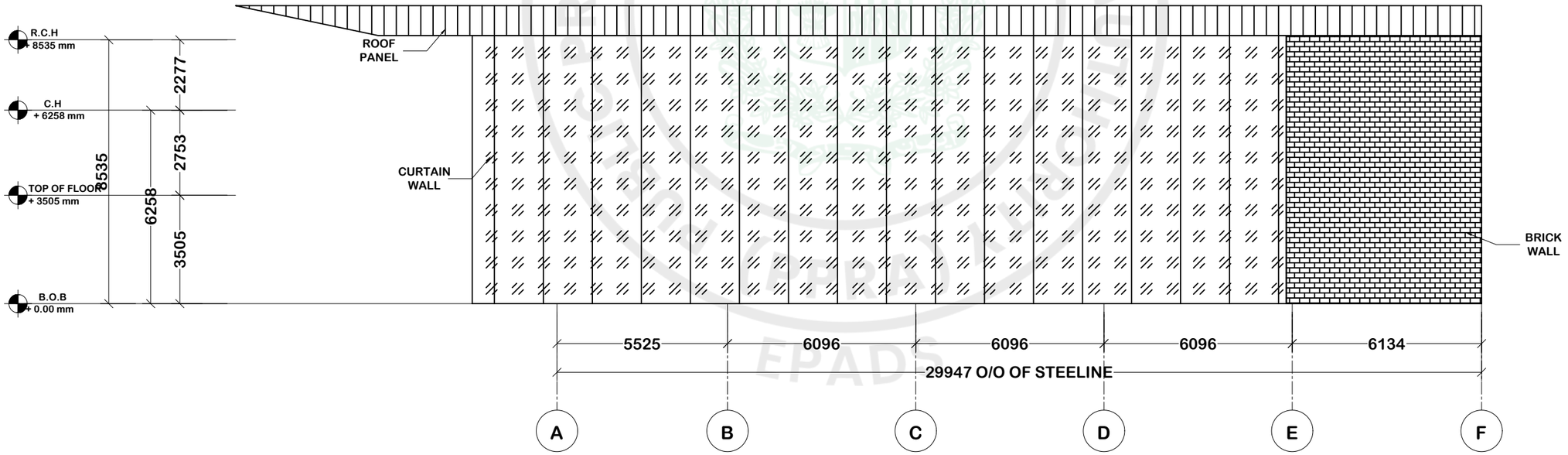

ELEV @ GL 5

GRAVITY ENGINEERING SERVICES	PROJECT: CDA ONE WINDOW	CONSULTANT: ---	DRAWING TITLE: SIDE WALL ELEV.
	CLIENT: CDA	CONTRACTOR: ---	LOCATION: ISLAMABAD

DRAWING NO: GQN-0784-ST17-R00
SCALE: N.T.S | DATE: 13-09-2026
DRAWN BY: ASD | DESIGN BY: TFL

S.NO.	REVISION DESCRIPTION.	REV. NO.	DATE:
1	ISSUED FOR CONSTRUCTION	R00	13-09-2026
2			
3			
4			

e-Pak Acquisition and Disposal System (EPADS) generated document | © 2026



M12x35 BOLTS FOR FLANGE BRACE

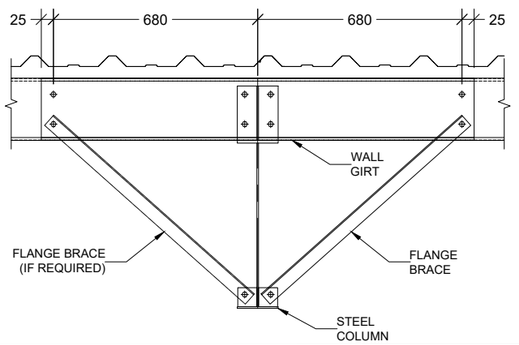

FLANGE BRACE DETAIL AT LONG LAP (705mm)

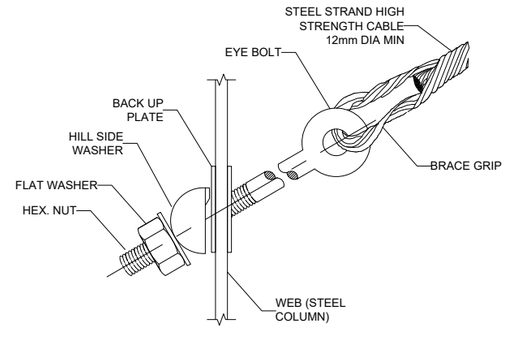

CABLE BRACE DETAIL (IF APPLICABLE)

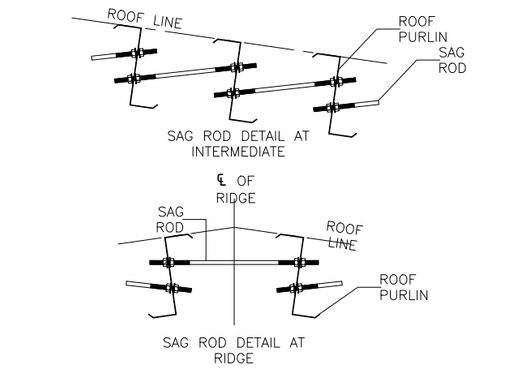

SAG ROD DETAIL AT ROOF

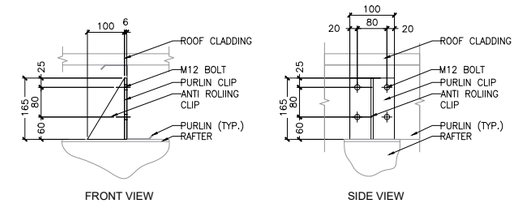

PURLIN AND ANTI-ROLLING CLIP DETAIL

GRAVITY ENGINEERING SERVICES

PROJECT: CDA ONE WINDOW	CONSULTANT: ---	DRAWING TITLE: ROOF FRAMING PLAN	DRAWING NO: GQN-0784-ST18-R00
CLIENT: CDA	CONTRACTOR: ---	LOCATION: ISLAMABAD	SCALE: N.T.S / DATE: 13-09-2026 / DRAWN BY: ASD / DESIGN BY: TFL

S.NO.	REVISION DESCRIPTION.	REV. NO.	DATE:
1	ISSUED FOR CONSTRUCTION	R00	13-09-2026
2			
3			
4			

e-Pak Acquisition and Disposal System (EPADS) generated document | © 2026

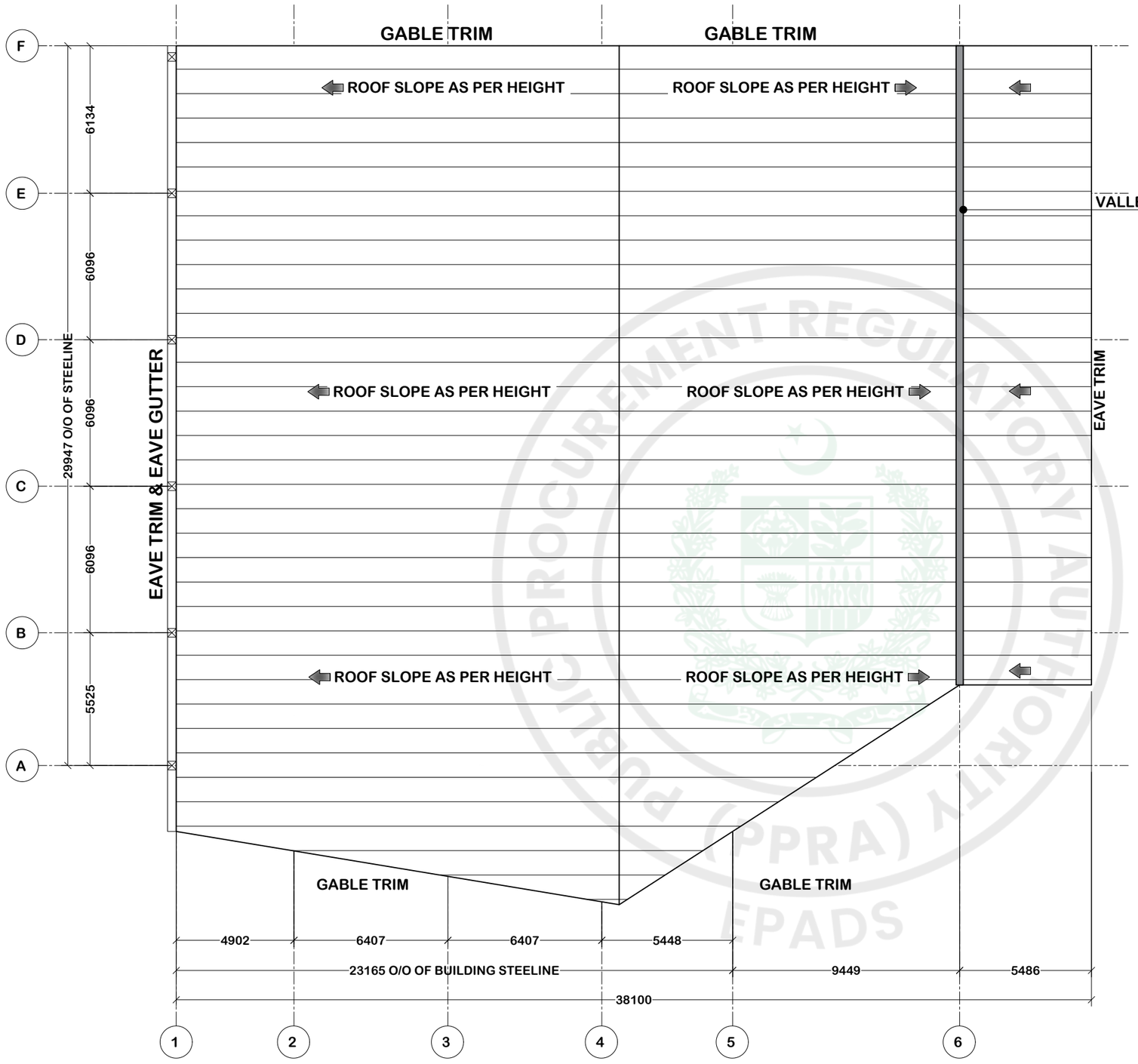

ROOF FRAMING AND SHEETING LAYOUT PLAN

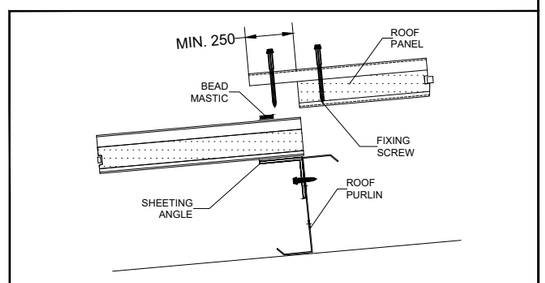

PANEL LAP DETAIL

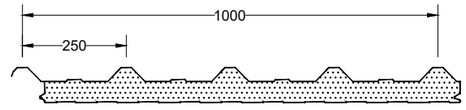

SANDWICH PANEL PROFILE

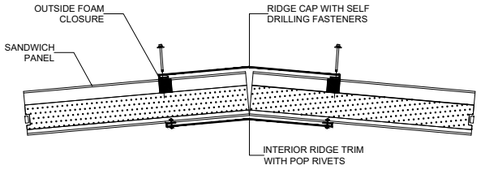

RIDGE DETAIL

GRAVITY ENGINEERING SERVICES

PROJECT: CDA ONE WINDOW	CONSULTANT: ---	DRAWING TITLE: ROOF SHEETING PLAN	DRAWING NO: GQN-0784-ST19-R00
CLIENT: CDA	CONTRACTOR: ---	LOCATION: ISLAMABAD	SCALE: N.T.S / DATE: 13-09-2026 / DRAWN BY: ASD / DESIGN BY: TFL

S.NO.	REVISION DESCRIPTION.	REV. NO.	DATE:
1	ISSUED FOR CONSTRUCTION	R00	13-09-2026
2			
3			
4			

e-Pak Acquisition and Disposal System (EPADS) generated document | © 2026

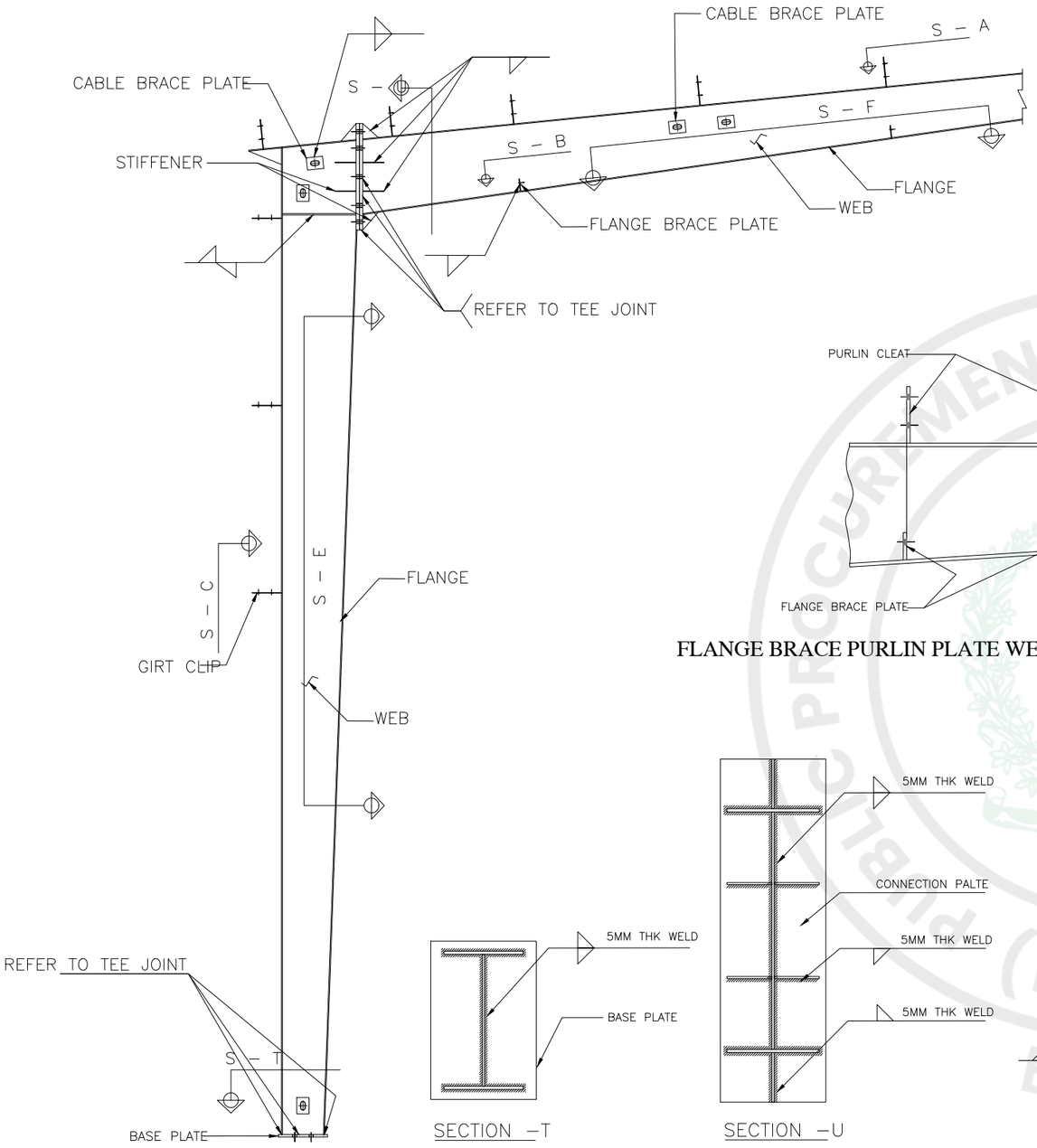

FLANGE BRACE PURLIN PLATE WELDING POSITION

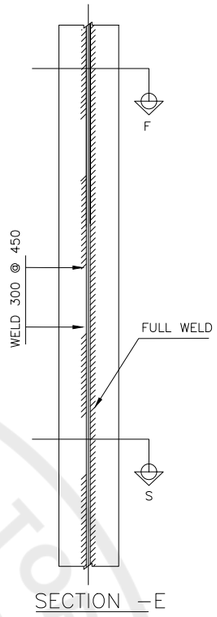

SECTION –E

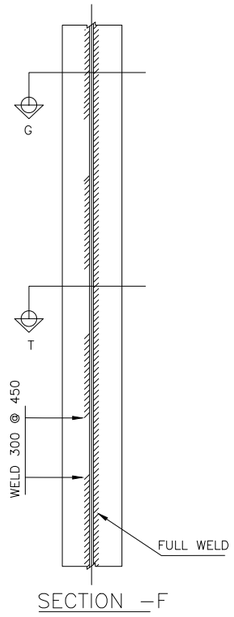

SECTION –F

GENERAL NOTES

1) ALL UNITS ON THIS DRAWING ARE EXPRESSED IN MILLIMETERS
2) ALL FILLET WELD SIZES SHOULD MEET THE REQUIREMENT OF AWS D1.1 TABLE 5.8 [EXCEPT TEE JOINT (A)].
3) WELDS SHOWN ON SPECIFIC SHOP DETAILS SHALL SUPERSEDE THIS DRAWING FOR THE PARTICULAR DETAIL.
4) EXCEPT CRANE BEAMS (UNLESS NOTED OTHERWISE) ALL THE MEMBERS WEB TO FLANGE SHALL BE SINGLE SIDE FILLET WELDING WITH SAW PROCESS

SYMBOL	DESCRIPTION
	FILLET WELD ONE SIDE
	FILLET WELD BOTH SIDES
	INTERMITTENT STAGGERED FILLET WELD

TABLE 5.8 AWS D1.1–2004

THICKNESS OF THICKER PART (T) (mm)	MINIMUM SIZES OF FILLET WELD (T) (mm) (SINGLE PASS OF WELD)
UP TO 6 mm	3
> 6 TO 12 mm	5
> 12 TO 20 mm	6
ABOVE 20 mm	8

NOTE:– FILLET SIZE NEED NOT EXCEED THE THICKNESS OF THE THINNER PART TO BE JOINED

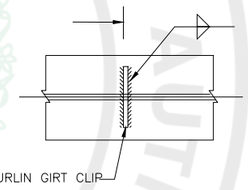

SECTION –A

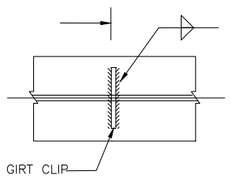

SECTION –C

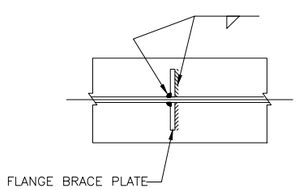

SECTION –B

SECTION –T

SECTION –U

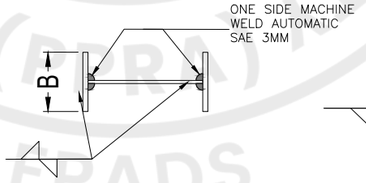

COLUMN
SECTION – F

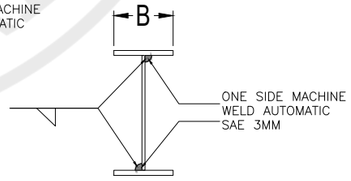

RAFTER
SECTION – T

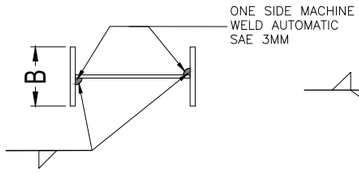

COLUMN
SECTION – S

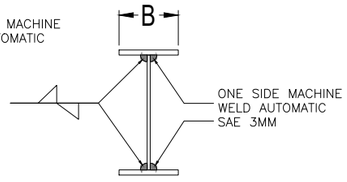

RAFTER
SECTION – G

WELDING AT RAFTER AND COLUMN CONNECTIONS

GRAVITY ENGINEERING SERVICES	PROJECT: CDA ONE WINDOW	CONSULTANT: ---	DRAWING TITLE: WELDING DETAIL	DRAWING NO: GQN-0784-ST20-R00		S.NO.	REVISION DESCRIPTION.	REV. NO.	DATE:
				SCALE: N.T.S	DATE: 13-09-2026	1	ISSUED FOR CONSTRUCTION	R00	13-09-2026
	CLIENT: CDA	CONTRACTOR: ---	LOCATION: ISLAMABAD	DRAWN BY: ASD	DESIGN BY: TFL	2			
						3			
						4			

e-Pak Acquisition and Disposal System (EPADS) generated document | © 2026