Standard Bidding Document

Procurement of 630 KVA Pole Mounted Distribution Transformer (Goods)

National

Single Stage-One Envelope

November 27, 2026

Islamabad Electric Supply Company (IESCO) (Material Management Directorate),Chief Engineer (MM)
IESCO Headquarters, Street # 40, Sector G-7/4., Islamabad Capital Territory
Phone: +92-319-599-1800, Email: ce_mm@iesco.com.pk

Table of Contents

REQUEST FOR BIDS 1

Instructions to Bidders 3

Bid Data Sheet 66

Bids Data Sheet (BDS) 25

Eligibility Criteria 31

Evaluation Criteria 32

Items/Lots 33

Related Services of Goods: 34

Items/Lot Specification 35

Price Schedule 36

General Conditions of Contract 38

Special Conditions of Contract 49

Bid Securing Declaration 55

Contract Form 57

Integrity Pact 60

Performance Guarantee Form 62

Annexure 65

Bid Data Sheet 66

Bid Security Form 66

Bidder Information Form 66

Declaration of Beneficial ownership 66

Deviation from Technical Provisions 66

Deviation from Commercial/contractual conditions 67

Form of Bid 67

Power of Attorney 67

Production Capacity Form 67

Special Conditions of Contract 49

Eligible Countries 68

Financial Resources 68

Specifications 68

Price Schedule Form 68

Procurement Forms 69

Past Experience and Completed Contracts 1

Historical Contract Non-Performance, and Pending Litigation and Litigation History 1

Current Contracts and Their Progress 1

Financial Capacity and Net Worth Evaluation Form 1

Average Annual Turnover 1

Additional Forms and Documents 72

REQUEST FOR BIDS

PROCUREMENT OF GOODS

1. The **Islamabad Electric Supply Company (IESCO) (Material Management Directorate)** has reserved Funds for the procurement planned for FY **2026-27**. The **Islamabad Electric Supply Company (IESCO) (Material Management Directorate)** intends to apply part of the proceeds of this Fund to cover eligible payments under the contract for the " **Procurement of 630 KVA Pole Mounted Distribution Transformer**" with the reference of **"P212277"**

2. The **Islamabad Electric Supply Company (IESCO) (Material Management Directorate)** invites sealed Bids from eligible Bidders for procurement of goods described in the bidding documents on **EPADS v2.0**.

3. **Single Stage-One Envelope** will be used by adopting **Least Cost Based Selection (LCBS)** Technique for the subject procurement, in line with the Public Procurement Rules, 2026 and any Regulations, Regulatory Guides, Procurement Guidelines or Instructions issued by the Authority from time to time.

4. All Bids must be accompanied by a Bid Security amount described in Bid Security Section in Bidding Document in the form of **Call at Deposit, Bank Guarantee** or all bids must be accompanied by bid securing declaration in the format specified in the Bidding documents

5. E-Bidding documents, containing detailed terms & conditions, specifications and requirements etc. are available on **e-Pak Acquisition and Disposal System (EPADS)** at **https://epads.gov.pk/opportunities/federal/procurements/212277** for all the interested bidders registered on **EPADS v2.0**. Bidders are required to get themselves registered on **EPADS v2.0** to participate in Bidding process.

6. The e-bids, prepared in accordance with the instructions in the e-Bidding Documents, must be submitted through **EPADS v2.0** on or before **Friday, December 11, 2026 10:30 AM**. E-bids will be opened using **EPADS v2.0** on the same day at **Friday, December 11, 2026 11:00 AM**. Manual submission

of Bids shall not be entertained. Those vendors who have not yet registered on the new version of **EPADS v2.0,** may register themselves on **https://vendors.epads.gov.pk/**. A tutorial to explain the registration process is available at **https://www.youtube.com/watch?v=MNW6T38v7tc**

In terms of Rule 65 of Public Procurement Rules, 2026 Grievance Redressal Committee (GRC) is notified for the subject procurement and notification copy is available on the procuring agency's website and on Authority's website at (**www.ppra.gov.pk**).

Islamabad Electric Supply Company (IESCO) (Material Management Directorate),
Chief Engineer (MM)
IESCO Headquarters, Street # 40, Sector G-7/4., Islamabad Capital Territory
+92-319-599-1800
ce_mm@iesco.com.pk

Instructions to Bidders

A. Introduction

1.Scope of Bids

1.1 The Procuring Agency (PA), as indicated in the **Bids Data Sheet (BDS)** invites Bids **through EPADS v2.0** for the provision of Goods as specified in the BDS and **in Section V – Evaluation Criteria, Specifications & Schedule of Requirements**. The name, identification, and number of items/deliverables are provided in the **BDS**. The successful Bidders will be expected to provide the goods within the specified period and timeline(s) as stated in the **BDS**.

2. Source of Funds

2.1 Source of funds is referred in Clause-2 I of Invitation for Bids.

3. Eligible Bidders

3.1 A Bidder may be natural person, company or firm or public or semi-public agency of Pakistan or any foreign country**,** or any combination of them with a formal existing agreement (on Judicial Papers) in the form of a joint venture, consortium, or association. In the case of a joint venture, consortium, or association, all members shall be jointly and severally liable for the execution of the Contract in accordance with the terms and conditions of the Contract. The joint venture, consortium, or association shall nominate a Lead Member as nominated in the BDS, who shall have the authority to conduct all business for and on behalf of any and all the members of the joint venture, consortium, or association during the Bidding process, and in case of award of contract, during the execution of the contract.

Verifiable copy of the agreement that forms a joint venture, consortium or association shall be required to be submitted as part of the Bid.

The appointment of Lead Member in the joint venture, consortium, or association shall be confirmed by submission of a valid Power of Attorney to the Procuring Agency.

Any bid submitted by the joint venture, consortium or association shall indicate the part of proposed contract to be performed by each party and each party shall be evaluated (or post qualified if required) with respect to its contribution only, and the responsibilities of each party shall not be substantially altered without prior written approval of the Procuring Agency and in line with any

instructions issued by the Authority.

(The limit on the number of members of JV or Consortium or Association may be prescribed in BDS, in accordance with the guidelines issued by the PPRA).

3.2 The invitation for Bids is open to all prospective suppliers, manufacturers, or authorized agents / dealers subject to any provisions of incorporation or licensing by the respective national incorporating agency or statutory body established for that particular trade or business. Procuring agencies shall specify the registration/licensing requirements for the foreign bidders keeping in view the requirement of that business.

3.3 A Bidder shall not have a conflict of interest. All Bidders found to have a conflict of interest shall be disqualified. A Bidder may be considered to have a conflict of interest with one or more parties in this Bidding process, if they:

1. are associated or have been associated in the past, directly or indirectly with a firm or any of its affiliates which have been engaged by the Procuring Agency to provide consulting services for the preparation of the design, specifications and other documents to be used for the procurement of the Goods to be purchased under this Invitation for Bids.

2. have controlling shareholders in common; or

3. receive or have received any direct or indirect subsidy from any of them; or

4. have the same legal representative for purposes of this Bid; or

5. have a relationship with each other, directly or through common third parties, that puts them in a position to have access to information about or influence on the Bids of another Bidder, or influence the decisions of the Procuring Agency regarding this Bidding process; or

6. Submit more than one Bid in this Bidding process.

3.4 A Bidder may be ineligible if –

1. he is declared bankrupt or, in the case of company or firm, insolvent;

2. payments in favor of the Bidder is suspended in accordance with the judgment of a court of law other than a judgment declaring bankruptcy and resulting (in accordance with the national laws) in the total or partial loss of the right to administer and dispose of its property;

3. the Bidder is convicted, by a final judgment, of any offence involving professional conduct;

4. the Bidder is blacklisted locally or by international organizations and hence debarred due to involvement in corrupt and fraudulent practices, or submission of false or misleading information or performance failure or involved in disrupting procurement process or due to breach of bid Securing Declaration.

3.5 As and when required, bidders shall provide to the Procuring Agency evidence of their eligibility, proof of compliance with the necessary legal requirements to carry out the contract effectively.

3.6 Bidders shall submit Bids relating to the nature, conditions and modalities of sub-contracting wherever the sub-contracting of any elements of the contract amounting to more than ten (10) percent of the Bid price is envisaged.

4. Eligible Goods and Related Services

4.1 All goods and related services to be supplied under the contract shall have their origin in eligible source countries, and all expenditures made under the contract will be limited to such goods and services. For purpose of this Bid, ineligible countries are the countries declared ineligible by the Federal Government.

5. One Bid per Bidder

5.1 A bidder shall submit only one Bid, in the same bidding process, either individually as a Bidder or as a member in a joint venture or any similar arrangement.

5.2 **The Bidder shall not engage a subcontractor for any portion of the contract if the value of such subcontracting exceeds thirty percent (30%) of the total contract amount.**

6. Cost of Bidding

6.1 Any cost incurred by the bidder relating to the preparation and submission of its Bid shall be borne by the bidder, and the Procuring Agency shall in no case be responsible or liable for those costs, regardless of the conduct or outcome of the bidding process.

B. Bidding Documents

7. Contents of Bidding Document

7.1 The Goods required, Bidding procedures, and terms and conditions of the contract are prescribed in the Bidding Documents. In addition to the Invitation for Bids, the Bidding documents which should be read in conjunction with any addenda issued in accordance with **ITB 10.1** include:

Section I -Invitation to Bids

Section II Instructions to Bidders (ITB)

Section III Bid Data Sheet (BDS)

Section IV Evaluation Criteria, Specifications, Schedule of Requirements

Section V Bid Forms

Section VI General Conditions of Contract (GCC)

Section VII Special Conditions of Contract (SCC)

Section VIII Contract Forms

Section IX Integrity Pact

Section X Declaration of Beneficial Ownership Information.

7.2 The Bidder is expected to examine all instructions, forms, terms and specifications in the Bidding documents. Failure to furnish all the information required in the Bidding documents through EPADS v2.0 will be at the Bidder’s risk and may result in the rejection of its Bids.

8. Clarification of Bidding documents

8.1 A prospective Bidder requiring any clarification of the Bidding documents may notify the Procuring Agency through EPADS v2.0**.**

8.2 The Procuring Agency will within two (02) working days after receiving the request for clarification, respond to any request for clarification through EPADS v2.0 provided that such request is received not later than three (03) days, prior to the deadline for the submission of Bids as prescribed in **ITB 22**

8.3 The Procuring Agency's response will be forwarded to all identified Prospective Bidders through EPADS v2.0, including a description of the inquiry,

but without identifying its source.

8.4 Should the Procuring Agency deem it necessary to amend the Bidding document as a result of a clarification, it shall do so following the procedure under **ITB 9.**

8.5 If indicated **in the BDS**, the Bidder's designated representative is invited at the Bidder's cost to attend a pre-Bid meeting at the place, date and time mentioned **in the BDS**. During this pre-Bid meeting, prospective Bidders may request clarification of the schedule of requirement, the Evaluation Criteria or any other aspects of the Bidding document.

8.6 Minutes of the pre-Bid meeting, if applicable, including the text of the questions asked by Bidders, including those during the meeting (without identifying the source) and the responses given, together with any responses prepared after the meeting will be uploaded on EPADS v2.0. Any modification to the Bidding documents that may become necessary as a result of the pre-Bid meeting shall be made by the Procuring Agency exclusively through the use of an Addendum pursuant to ITB 9. Non-attendance at the pre-Bid meeting will not be a cause for disqualification of a Bidder.

9. Amendment of Bidding documents

9.1 Before the deadline for submission of Bids, the Procuring Agency for any reason, whether at its own initiative or in response to a clarification requested by a prospective Bidder or Pre-Bid meeting may modify the Bidding documents by issuing addenda through EPADS v2.0.

9.2 The Procuring Agency shall promptly publish the addendum through EPADS v2.0.

Any addendum issued including the notice of any extension of the deadline shall also be communicated through EPADS v2.0 to all the bidders who have already submitted their bids. Such bidders shall have the right to withdraw their already submitted bid and re-submit the revised bid prior to the original or extended bid submission deadline.

9.3 To give prospective Bidders reasonable time in which to take an addendum/corrigendum into account in preparing their Bids, the Procuring Agency may, at its discretion, extend the deadline for the submission of Bids through EPADS v2.0:

Provided that the Procuring Agency shall extend the deadline for submission of Bids, if such an addendum is issued within last three (03) days of the Bids submission deadline.

C. Preparation of Bids

10. Language of Bid

10.1 The Bid prepared by the bidder, as well as all correspondence and documents relating to the Bids exchanged by the Bidder and the Procuring Agency shall be written in the English language unless otherwise specified in the BDS**.** Supporting documents and printed literature furnished by the Bidder may be in another language provided they are accompanied by an accurate translation of the relevant pages in the English language unless otherwise specified in the **BDS**, in which case, for purposes of interpretation of the Bidder, the translation shall govern.

11. Documents and samples Constituting the Bid

11.1 The Bid prepared by the Bidder shall constitute the documents required in the **BDS**.

Details of sample(s) where applicable and requested in the BDS.

Documentary evidence established in accordance with ITB 13 that the Bidder is eligible and/or qualified for the subject bidding process;

Documentary evidence established in accordance with **ITB 03** that the Bidder has been authorized by the manufacturer to deliver the goods into Pakistan, where required and where the supplier is not the manufacturer of those goods;

Documentary evidence established in accordance with ITB 12 that the goods and related services to be supplied by the Bidder are eligible goods and services, and conform to the Bidding Documents;

Bid security or Bid Securing Declaration furnished in accordance with **ITB ---.**

12. Documents Establishing Eligibility of the Goods and Conformity to Bidding documents

12.1 To establish the conformity of the bidder to the Bidding document, the Bidder shall furnish as part of its Bids the documentary evidence that Goods

provided conform to the technical specifications and standards.

13. Documents Establishing Eligibility and Qualification of the Bidder

13.1 Pursuant to **ITB 10,** the Bidder shall furnish, as part of its Bid, all those documents establishing the Bidder's eligibility to participate in the Bidding process and/or its qualification to perform the contract if its Bid is accepted.

14. Form of Bid

14.1 The Bidder shall fill the Form of Bid furnished in the Bidding document. The Bid Form must be completed without any alterations to its format and no substitute shall be accepted.

15. Bid Prices

15.1 The Bid Prices quoted by the Bidder in the Form of Bid and in the Price Schedules shall conform to the requirements specified below or exclusively mentioned hereafter in the Bidding documents.

15.2 **All items in the Schedule of Requirement must be listed and priced separately in the Price Schedule(s). If a Price Schedule shows items listed but not priced and neither explicitly denied, their prices shall be construed to be included in the prices of other items.**

15.3 In the event that any item(s) in the Price Schedule are not quoted, and such omission is determined by the Procuring Agency not to materially affect the responsiveness of the Bid, the Procuring Agency may, for the sole purpose of bid evaluation and comparison, assign a price to the unquoted item(s) in accordance with the following methodology:

(a) The assigned price shall be the average of the prices quoted for the same item(s) by all substantially responsive bidders; or

(b) In cases where no comparable quotations are available, the Procuring Agency shall apply the corresponding item price from its duly approved cost estimate for evaluation purposes.

The prices so assigned shall be utilized exclusively for bid evaluation and comparison, and shall not, under any circumstances, be incorporated into or form part of the Contract Price.

15.4 The Bid price to be quoted in the Form of Bid in accordance with **ITB 13.1** shall be the total price of the Bid.

15.5 The Bidder shall indicate on the appropriate Price Schedule, the unit prices (where applicable) and total Bid price of the Goods it proposes to provide under the contract.

15.6 Prices quoted by the Bidder shall be fixed during the Bidder's performance of the contract and not subject to variation on any account. A Bid submitted with an adjustable price will be treated as non-responsive and shall be rejected.

16. Bids Currencies

16.1 Prices shall be quoted in Pakistani Rupees unless otherwise specified in the BDS in accordance with Rule 42 (2) of the Public Procurement Rules, 2026.

17. Bids Validity Period

17.1 Such extensions may be more than one time but the total period of such extension shall not exceed the original bid validity period.

17.2 Bids shall remain valid for the period specified in the **BDS** after the Bid submission deadline prescribed by the Procuring Agency. A Bid valid for a shorter period shall be rejected by the Procuring Agency as non-responsive**.** The period of Bid validity will be determined from the complementary Bid securing instrument, i.e. the expiry period of Bid Security or Bids Securing Declaration as the case may be.

The procuring agency shall ordinarily be under an obligation to process and evaluate the bid and to issue letter of award within the stipulated bid validity period.

17.3 Under exceptional circumstances, prior to the expiration of the initial Bid validity period, the Procuring Agency may request the Bidders' consent to an extension of the period of validity of their Bids through EPADS v2.0,. The Bid Security provided under **ITB 17** shall also be suitably extended. A Bidder may refuse the request without forfeiting its Bid security or causing to be executed its Bid Securing Declaration. A Bidder agreeing to the request will not be required nor permitted to modify its Bid, but will be required to extend the validity of its Bid Security or Bid Securing Declaration for the period of the extension.

18. Bid Security or Bid Securing Declaration

18.1 The Bidder shall furnish as part of its Bid, a Bid Security in accordance with Rule 36 of the Public Procurement Rules, 2026.

18.2 The original Bid Security shall be enclosed within the sealed envelope and to be submitted physically before closing time for submission of bids. Whereas, scanned copy of bid security shall be uploaded electronically through EPADS v2.0 before closing hours for submission of bids.

18.3 The Bidder who failed to submit the original Bids security before the submission deadline shall be disqualified straightaway.

18.4 The Bid Security or Bid Securing Declaration is required to protect the Procuring Agency against the risk of Bidder’s conduct which would warrant the security’s forfeiture, pursuant to **ITB 18.7.**

18.5 The Bid Security shall be denominated in the local currency or in another freely convertible currency, and it shall be in the form specified in the BDS which shall be in any of the following:

a) a bank guarantee, a bank draft, an irrevocable letter of credit issued by a Scheduled bank in the form provided in the Bidding Documents or another form acceptable to the Procuring Agency;

b) a cashier’s or certified cheque; or

c) another security if indicated in the BDS.

The Bid Security shall be valid for twenty-eight (28) days beyond the end of the validity of the Bid. This shall also apply if the period for Bid Validity is extended. In either case, the form must include the complete name of the Bidder.

18.6 The Bid Security shall be payable promptly upon written demand by the Procuring Agency in case any of the conditions listed in **ITB 18.7** are invoked.

18.7 Unsuccessful Bidders' Bid Security will be discharged or returned as promptly as possible, however in no case later than thirty (30) days after the expiration of the period of Bid Validity prescribed by the procuring agency pursuant to **ITB 17.** The Procuring Agency shall make no claim to the amount of the Bid Security, and shall promptly return the Bid Security documents, after whichever of the following that occurs earliest:

a. the expiry of the Bid Security;

b. the entry into force of a procurement contract and the provision of a Performance Guarantee, for the performance of the contract if such a guarantee, is required by the Bid documents;

c. the rejection by the Procuring Agency of all Bids;

d. cancellation of procurement proceedings.

e. the withdrawal of the Bid prior to the deadline for the submission of Bids, unless the Bid document stipulates that no such withdrawal is permitted.

18.8 The successful Bidder's Bid Security will be discharged upon the Bidder signing the contract**,** or furnishing the Performance Guarantee.

18.9 The Bid Security may be forfeited or the Bid Securing Declaration executed:

a. if a Bidder:

b. withdraws its Bid during the period of Bid Validity as specified by the Procuring Agency, and referred by the Bidder on the Form of Bids except as provided for in **ITB 16.2**; or

c. does not accept the correction of errors**;** or

d. in the case of a successful Bidder, if the Bidder fails:

e. to sign the contract; or

f. to furnish Performance Guarantee**.**

19. Withdrawal, Substitution, and Modification of Bid

19.1 Before Bid submission deadline, any Bidder may withdraw, substitute, or modify its Bid after it has been submitted through EPADS v2.0.

20. Format and Signing of Bid

20.1 The Bidder shall prepare and submit Bids with due diligence after carefully reading all the terms and condition before bid submission deadline through EPADS v2.0.

D. Submission of Bids

21. Submission of Bids through EPADS v2.0 before bid submission deadline.

21.1 The Technical and Financial Bids, shall be submitted electronically through EPADS, before bid submission deadline. The bid submission option shall be automatically disabled once the deadline is over.

22. Deadline for Submission of Bids

22.1 Bids shall be received by the Procuring Agency through EPADS v2.0 before bid submission deadline.

22.2 The Procuring Agency may, under exceptional circumstances, extend the deadline for the submission of Bids, after recording reasons in writing and in an equal opportunity manner.

In such case, all rights and obligations of the Procuring Agency and the Bidders that were previously governed by the original deadline shall thereafter be subject to the revised deadline.

E. Opening and Evaluation of Bids

23. Opening of Bids

23.1 The respective Bid Evaluation Committee of the Procuring Agency shall open all Bids through the EPADS v2.0, on the date and time specified in the Bid Data Sheet (BDS).

23.2 The respective Bid Evaluation Committee **shall generate minutes through EPADS v2.0 containing brief details of bid opening process.** The record of the Bid opening shall include, as a minimum: the name of the Bidder, the Bid price if applicable, and the presence or absence of a Bid Security or Bid Securing Declaration.

23.3 The procuring agency shall live broadcast the opening of bids on national media or on their website or digital channels, if the volume of procurement exceeds five hundred million rupees in case of goods and services and one thousand million rupees in case of works.

23.4 In case the date of opening of bid has been declared as public holiday or the procuring agency fails to open bid due to any EPADS v2.0 related issues, the submission and opening of bids shall be shifted to the next working day at the same time.

23.5 In case of Single Stage One Envelope Procedure, the Bidders names, the Bid prices, the total amount of each Bid and, the presence or absence of Bid Security, Bid Securing Declaration and such other details as the Procuring Agency may consider appropriate, will be announced by the Bid respective Evaluation Committee.

23.6 No bid will be rejected at the time of bid openning except for bids whose original bid security has not been provided to the procuring agency before bid submission deadline.

24. Clarification of Bids

24.1 To assist in the examination, evaluation and comparison of Bids of the Bidders, the respective Bid Evaluation Committee may, ask any Bidder for a clarification of its Bid including breakdown of prices.

24.2 The request for clarification and the response shall be sought through EPADS v2.0 before **three days prior to the deadline for submission of bids.** No change in the prices or substance of the Bids shall be sought, offered, or permitted.

24.3 The alteration or modification in the bids which in any way affect the following parameters will be considered as a change in the substance of a Bid:

1. evaluation & qualification criteria;
2. required scope of work or specifications;
3. all securities requirements;
4. tax requirements;
5. terms and conditions of Bidding documents.
6. change in the ranking of the Bidder

24.4 From the time of bid(s) opening to the time of Contract award if any Bidder wishes to contact the Procuring Agency on any matter related to the Bids it should do so through **EPADS v2.0**.

25. Preliminary Examination of Bids

25.1 Prior to the detailed evaluation of Bids, the respective Bid Evaluation Committee will determine whether each Bid:

1. meets the eligibility criteria defined in **ITB 3**;

2. has been prepared as per the format and contents defined by the Procuring Agency in the Bidding documents;

3. is accompanied by the required securities; and

4. is substantially responsive to the requirements of the Bidding documents.

25.2 The respective Bid Evaluation Committee's determination of a Bid's responsiveness will be based on the contents of the Bid itself.

25.3 A substantially responsive Bid is one which conforms to all the terms, conditions, and specifications of the Bidding documents, without material deviation or reservation. A material deviation or reservation is one that: -

1. affects in any substantial way the scope, quality, or performance of the Goods;

2. limits in any substantial way, inconsistent with the Bidding documents, the Procuring Agency's rights or the Bidders obligations under the Contract; or

3. if rectified, would affect unfairly the competitive position of other Bidders presenting substantially responsive Bids.

25.4 If a Bid is not substantially responsive, it will be rejected by the respective Bid Evaluation Committee and may not subsequently be evaluated for complete technical responsiveness.

26. Examination of Terms and Conditions; Technical Evaluation

26.1 The respective Bid Evaluation Committee shall examine the Bids to confirm that all terms and conditions specified in the **GCC** and the **SCC** have been accepted by the Bidder without any material deviation or reservation.

26.2 The respective Bid Evaluation Committee shall evaluate the technical aspects of the Bids submitted, to confirm that all requirements specified in Schedule of Requirements and Technical Specifications of the Bidding documents have been met without material deviation or reservation.

26.3 If after the examination of the terms and conditions and the technical evaluation, the respective Bid Evaluation Committee determines that the Bid is not substantially responsive in accordance with **ITB,** it shall reject the Bid.

27. Correction of Errors

27.1 Bids determined to be substantially responsive will be checked for any arithmetic errors. Errors will be corrected as follows: -

1. if there is a discrepancy between unit price and the total price that is obtained by multiplying the unit price and quantity, the unit price shall prevail, and the total price shall be corrected, unless in the opinion of the respective Evaluation Committee there is an obvious misplacement of the decimal point in the unit price, in which the total price as quoted shall govern and the unit price shall be corrected;

2. if there is an error in a total corresponding to the addition or subtraction of sub-totals, the sub-totals shall prevail and the total shall be corrected; and

3. where there is a discrepancy between the amounts in figures and in words, the amount in words will govern.

4. Where there is discrepancy between grand total of price schedule and amount mentioned on the Form of Bid, the amount referred in Price Schedule shall be treated as correct subject to elimination of other errors.

27.2 The amount stated in the Bid will be adjusted by the respective Bid Evaluation Committee in accordance with the above procedure for the correction of errors and, with the concurrence of the Bidder, shall be considered as binding upon the Bidder. If the Bidder does not accept the corrected amount, its Bid will then be rejected, and the Bid Security may be forfeited or the Bids Securing Declaration may be executed.

28. Conversion to Single Currency

28.1 For the purposes of comparison of bids quoted in different currencies, the price shall be converted into a single currency in accordance with Rule 42(2) of Public Procurement Rules,2026.

29. Evaluation of Bids

29.1 The Bids, quotations, or proposals shall be evaluated by the respective evaluation committees as per evaluation criteria prescribed in the Bidding Documents in accordance with Rule 11, 12 and 13 of the Public Procurement Rules, 2026.

29.2 While evaluating the bids, the procuring agency shall consider the following:

i. Bids will be evaluated on lump sum bid basis or items wise or Lot wise (contracts), as specified in the BDS; and the Bid Price;

ii. correction of arithmetic errors in accordance with ITB 27;

30. Domestic Preference

30.1 The respective Bid Evaluation Committee shall evaluate and compare bids, allow for preference to domestic bidders, while competing with the international bidders in accordance with the policies of the Federal Government.

The percentage of preference, to be accorded shall be clearly mentioned in the bidding documents under the bid evaluation criteria.

31. Determination of Successful Bid

31.1 **Selection technique will be adopted for determining the Successful Bid in accordance with the criteria referred in the BDS or prescribed in the separate section titled as Evaluation Criteria.**

31.2 **Least Cost Based Selection (LCBS)**
After meeting the requirements of eligibility, qualification and substantial responsiveness, the bid in compliance with all the mandatory (technical) specifications/requirements and/or requisite quality threshold (if any), and having lowest evaluated cost (or financial proposal) shall be considered Successful Bid.

31.3 **Quality and Cost Based Selection (QCBS)**
In such combination, there shall be some specific weightage of both the technical features and financial aspects of the proposal. The financial marks shall be awarded on the basis of inverse proportion calculations. The successful bid shall be declared, on the basis of combined evaluation.

31.4 **Quality Based Selection (QBS)**
After meeting the requirements of eligibility, qualification and substantial responsiveness the bid in compliance with all the mandatory (technical) specifications/requirements and attaining highest marks in the Technical Evaluation considering all other qualitative and/or quantitative parameters (or point rated criteria) for technical proposal(s) such as working methodology, implementation plan, resource allocation, additional functionalities, risk

management approach, knowledge transfer techniques, post implementation methodology etc. shall be treated as highest ranked bid. Later on, the financial proposal of highest ranked bidder shall be opened, however, in case of failure to proceed further with such a bidder, the procuring agency may resort to second highest bidder and so on.

31.5 The Procuring Agency may adopt the Quality & Cost Based Selection Technique due to the following two reasons:

1. Where the Procuring Agency knows about the main features, usage and output of the products; however not clear about the complete features, technical specifications and functionalities of the goods to be procured and requires the bidders to submit their proposals defining those features, specifications and functionalities; or

2. Where the Procuring Agency, in addition to the mandatory requirements and mandatory technical specifications, requires parameters specified in Evaluation Criteria to be evaluated while determining the quality of the goods.

31.6 In such cases, the Procuring Agency may allocate certain weightage to these factors as a part of Evaluation Criteria, and may determine the ranking of the bidders on the basis of combined evaluation in accordance with provisions of Rule 2(1)(xxviii) of the Public Procurement Rules, 2026.

32. Abnormally Low Financial Bids

32.1 An abnormally low bid is a bid that, in light of the Procuring Agency's cost estimate, market conditions, or other received bids, appears to be unrealistically low and may not be sustainable for successfull contract execution.

32.2 **Where the Bid price is considered to be abnormally low, the Procuring Agency shall perform price analysis either during determination of Successful Bids or as a part of the post-qualification process.**

32.3 The Procuring Agency may reject an Abnormally low financial bid in accordance with Rule 43 of the Public Procurement Rules, 2026.

32.4 In order to identify the Abnormally Low Bids (ALB) following approaches can be considered to minimize the scope of subjectivity:

1. Comparing the Bid price with the cost estimate;

2. Comparing the Bid price with the Bid(s) offered by other Bidders submitting substantially responsive Bids; and

3. Comparing the Bids price with prices paid in similar contracts in the recent past either government- or development partner-funded.

32.5 The respective Bid Evaluation Committee will determine to its satisfaction whether the Bidder that is selected as having submitted the successful bid is qualified to perform the contract satisfactorily.

32.6 The determination will take into account the Bidder's financial, technical, and production capabilities. It will be based upon an examination of the documentary evidence of the Bidder's qualifications submitted by the Bidder, as well as such other information as the Procuring Agency deems necessary and appropriate. Factors not included in these Bidding documents shall not be used in the evaluation of the Bidders' qualifications.

32.7 Respective Bid Evaluation Committee may seek "Certificate for Independent Price Determination" from the Bidder and the results of reference checks may be used in determining an award of contract.

Explanation: The Certificate shall be furnished by the Bidder. The Bidder shall certify that the price is determined keeping in view of all the essential aspects such as raw material, its processing, value addition, optimization of resources due to economy of scale, transportation, insurance and margin of profit etc.

32.8 An affirmative determination will be a prerequisite for award of the contract to the Bidder. A negative determination will result in rejection of the Bidder's Bid, in which event the respective Bid Evaluation Committee will proceed to the next ranked Bidder to make a similar determination of that Bidder's capabilities to perform satisfactorily.

F. Award of Contract

33. Criteria of Award

33.1 The Procuring Agency will award the Contract to the Bidder whose Bids has been determined to be substantially responsive to the Bidding documents and who has been declared as Successful Bidder.

34. Negotiations

34.1 In accordance with Rule 52A of Public Procurement Rules, 2026, without changing the cost and scope of work or services, the procuring agency may

negotiate with the successful bidder (with a view to streamline the work or task execution, at the time of contract finalization) on methodology, work plan, staffing and special conditions of the contract.

There shall be no limitation on the successful bidder offering voluntary reduction in bid price without affecting the quality or scope of the procurement.

35. Procuring Agency's Right to reject all bids

35.1 The Procuring Agency reserves the right to reject all bids or proposals at any time prior to the issuance of the Letter of Award, without incurring any liability, in accordance with Rule 45 of the Public Procurement Rules, 2026.

36. Cancellation of Procurement

36.1 The procuring agency reserves the right to cancel the procurement proceedings in accordance with Rule 46 of the Public Procurement Rules, 2026.

37. Procuring Agency’s Right to Vary Quantities at the Time of Award

37.1 The Procuring Agency reserves the right at the time of contract award to increase or decrease the **quantity of** Goods originally specified in these Bidding documents provided this does not exceed **by** 15%, without any change in unit price or other terms and conditions of the Bids and Bidding documents.

38. Notification of Award

38.1 Prior to the award of contract, the procuring agency shall announce and publish the result of bid evaluation on EPADS v2.0 in accordance with Rule 48 of the Public Procurement Rules, 2026.

The Bidder whose Bids has been accepted will be notified of the award by the Procuring Agency prior to expiration of the Bids/Bid Validity period. The Letter of Award will state the sum that the Procuring Agency will pay the successful Bidder in consideration for the delivery of Goods as prescribed by the Contract (hereinafter and in the Contract called the "Contract Price).

38.2 The Letter of award will constitute the formation of the Contract, subject to the Bidder furnishing the Performance Guarantee and signing of the contract.

39. Signing of Contract

39.1 Promptly after issuance of Letter of award, Procuring Agency shall send the successful Bidder the draft Contract, incorporating all terms and conditions as agreed by the parties to the contract.

39.2 Immediately after the Redressal of grievance by the GRC (if any), and **after fulfillment of all conditions precedent** of the Contract Form, the successful Bidder and the Procuring Agency shall sign the Contract.

40. Corrupt & Fraudulent Practices

40.1 Procuring Agencies (including beneficiaries of Government funded projects and procurement) as well as Bidders/Contractors under Government financed contracts, observe the highest standard of ethics during the procurement and execution of such contracts, and will avoid engaging in any corrupt and fraudulent practices.

F. Grievance Redressal & Complaint Review Mechanism

41. Constitution of Grievance Redressal Committee

41.1 The Grievance Redressal Committee shall address the grievance, if any submitted by any party, including the bidder, in accordance with Rule 65 of the Public Procurement Rules, 2026 read with Redressal of Grievances Regulations, 2021.

In case if any party or the bidder is not satisfied with the decision of the GRC or if it fails to decide within ten days, the bidder or the party may file an appeal before the Appellate Committee of the Authority in accordance with Rule 65(7) of the Public Procurement Rules, 2026 to be read with Redressal of Grievances Regulations, 2021.

G. Mechanism of Blacklisting

42. Mechanism of Blacklisting

42.1 The Procuring Agency shall initiate blacklisting proceedings against any bidder, supplier, or contractor in accordance with the Rule 25 of the Public Procurement Rules, 2026.

42.2 The blacklisted/debarred bidder may file the review petition before the Authority in accordance with Rule 25 (6) of the Public Procurement Rules, 2026 to be read with Procedure of filing and disposal of Review Petitions Regulations, 2021.

43. Contract Management

43.1 For each procurement, the Procuring Agency shall designate a Contract Manager, who shall be duly responsible for the efficient management and administration of the contract in strict compliance with the provisions set forth under Rules 58, 59, and 60 of the Public Procurement Rules, 2026.

44. Inspection of goods and evaluation of services.

44.1 The Inspection Committee or the Firm shall have the right to conduct inspections of the goods in accordance with Rule 61 of the Public Procurement Rules, 2026.

45. Socio-economic development.

45.1 In accordance with Rule 63 of the Public Procurement Rules, 2026, preference may be granted to small and medium enterprises and marginalized groups in accordance with the policies notified by the Federal Government.

46. Environmental objectives

46.1 As per Rule 64 of the Public Procurement Rules, 2026, the procuring agency may seek to procure goods with a reduced environmental impact throughout their life cycle when compared to goods services with the same primary function that may otherwise be procured.

Bid Data Sheet

Bids Data Sheet (BDS)

The following specific data for the procurement of Goods to be procured shall complement, supplement, or amend the provisions in the Instructions to Bidders (ITB). Whenever there is a conflict, the provisions herein shall prevail over those in ITB.

BDS Clause Number
ITB Number
Amendments of, and Supplements to, Clauses in the Instruction to Bidders

A. Introduction

BDS Clause Number 1
ITB Number 1.1

Name of Procuring Agency: **Islamabad Electric Supply Company (IESCO) (Material Management Directorate)**

The subject of procurement is: **Procurement of 630 KVA Pole Mounted Distribution Transformer**

Period for Provision of Goods:

Extension Period (if applicable):

Expected commencement date: **Thursday, December 31, 2026**

BDS Clause Number 2
ITB Number 2.1

Source of funds [Enter source of funds]

Financial year for the operations of the Procuring Agency: **2026-27**

Name and identification number of the Contract: **P212277**

Identification Number:

BDS Clause Number 3
ITB Clause Number 3.1

Eligible Bidder [Enter eligibility of bidder]

JV/Consortium or Association Allowed: **No**
Number of JV/Consortium Members: **Nil**
see section of eligibility criteria.

B. Bidding Documents

BDS Clause Number 4

ITB Clause Number 4.1

Eligible goods and related services [Enter requirements for eligible goods and related services, if any]

ITB Number 8.1

The Bidders may seek clarifications through **EPADS v2.0** : Clarification Date: Tuesday, December 8, 2026

ITB Number 8.2

The Bidders may seek clarifications through **EPADS v2.0** : Clarification Date: Tuesday, December 8, 2026

ITB Number 8.3

The Bidders may seek clarifications through **EPADS v2.0** : Clarification Date: Tuesday, December 8, 2026

ITB Number 8.5

Pre-bid meeting will be/will not be held [Tick the appropriate] If yes write down the time, and date of the pre-Bid meeting:
[The meeting should take place not later than one weeks before the deadline for Bid submission.]

C. Preparation of Bids

BDS Clause Number 5
ITB Number 10.1

The Language of all correspondences and documents related to the Bids shall be in: **English**

List of documents required along with the bid:

1. The net financial resources should be at least 50% of the contract value (after subtracting the current commitments/liabilities), as per attached annexure.

2. The bidder should have an Average annual turnover in the last 3-years equal to one & half (1.5) times of the contract value.

3. Copies of P.Os of the similar nature product previously supplied to any formation of NTDC/WAPDA/DISCOs/GENCOs/Govt. Dept. during the last two years.

4. Production Capability/Capacity (as per attached annexure)

5. Manufacturing experience of at least 2-years or more.

6. Contractual / Supply experience of at least one year or more.

7. Previous performance/appraisal of the bidder or supply record of the product supplied by them.

8. Integrity Pact (No contract amount should be mentioned) at time of bid submission.However, if contract award, the Integrity Pact must be submitted for the contract amount exceeding 10 Million.

9. Declaration of Beneficial Ownership for the contract amount exceeding 50 Million (as per attached annexure)

10. The amount of litigation shall not exceed 50% of the value of this procurement at the time of bid submission for each lot (if any).

11. Declaration regarding use of prime material duly signed and stamped by the manufacturer.

12. Declaration of the material used in manufacturing of required item will 100% conform to the NTDC Specifications DDS-84:2020 (Amended to date).

13. Technical literature, if any along with make and origin of product offered.

14. Certifies that the firm is not involved/using scrap or used material since five years or since ___(No. of years since in the manufacturing business).

15. No Deviation certificates from Commercial terms and technical specification.

16. Certify that the bid conforms to tender conditions and laid down specifications.

BDS Clause Number 6
ITB Number 11.1

Documents required / not required with bid submission [enter list of documents] Samples required / not required with the bid [Enter the names and number of samples]

Items/Lots and their related documents:

See section items and Lots

BDS Clause Number 7
ITB Number 12.1

Items / Lots Specifications:

see section of items specifications.

BDS Clause Number 8
ITB Number 15.6

The price shall be **Fixed**.

BDS Clause Number 9
ITB Number 16.1

Currency of the Bids shall be : **PKR**

BDS Clause Number 10
ITB Number 17.1

The Bids/Bid Validity period shall be: **120 Days**

BDS Clause Number 11
ITB Number 18.1

The amount of Bid Security shall be as defined in Bid Security Section for items and lots given in **BDS 6**

Instrument of Bid Security shall be in the Name of : **Chief Executive Officer IESCO Islamabad**

The Bid Security shall be in the form of: **Call at Deposit, Bank Guarantee**

ITB Number 18.2

The address for submission of original bid security is [Insert the address for bid security submission]

D. Submission of Bids

BDS Clause Number 12
ITB Number 20.1

Bid shall be submitted online on EPADS v2.0 whereas hard copy of the bid security should be submitted to the following;

IESCO Headquarters, Street # 40, Sector G-7/4., Islamabad Capital Territory before bid submission deadline.

Bids that are not submitted on EPADS v2.0 shall be disqualified.

The deadline for Bids submission is: **Friday, December 11, 2026 10:30 AM**

Day *:* ***Friday***

Date: ***Friday, December 11, 2026***

Time *:* ***11:00 AM***

E. Opening and Evaluation of Bids

BDS Clause Number 13
ITB Number 23.1

The Bids opening shall take place on **EPADS v2.0**.

Day *:* ***Friday***

Date: ***Friday, December 11, 2026***

Time *:* ***11:00 AM***

ITB Number 29.2

The procuring agency shall consider the following:
lump sum bid basis; or
items wise; or
Lot wise (contracts),

ITB Number 30.1

BDS Clause Number 14
ITB Number 31.1

Domestic Preference [applicable / not applicable]

ITB Number 31.2

Selection technique adopted will be:
The Procuring Agency shall use any of the following evaluation techniques for determination of successful bid.

Least Cost Base Selection (LCBS)
Quality and Cost Based Selection (QCBS)
Quality Based Selection (QBS)
[Insert the Evaluation Technique]

Selection technique adopted will be: **Least Cost Based Selection (LCBS)**
see Evaluation Criteria

F. Review of Procurement Decisions

BDS Clause Number 15
ITB Number 41.1

Grievence against this procurement shall be submitted online on EPADS v2.0.

Arbitrator shall be appointed by mutual consent of the both parties.

ITB Number 42.2

The Address of PPRA Grievance Redressal Appellate Committee to submit a copy of grievance:

Grievance Redressal Appellate Committee,
Public Procurement Regulatory Authority
1st Floor, G-5/2, Islamabad, Pakistan
Tel: +92-51-9202254

Eligibility Criteria

All Active Taxpayers shall be eligible to participate in the procurement process, unless expressly excluded or otherwise restricted under the Eligibility Criteria specified by the Procuring Agency.

Required Registration
NADRA CITIZENSHIP (CNIC/NICOP)
FBR (NTN)
FBR (GSTN)

Eligibility Criteria	Document
Declaration for no blacklisting/debarment at the time of submission of bid fromNTDC/WAPDA/DISCOs/GENCOs/Govt. Dept. and PPRA (locally or internationally) for agent, manufacturer and bidder.	Yes
Possession of valid prototype approval at the time of opening of bid	Yes
Copy of registeration for the material quoted in tender with DISCO/PPMC/WAPDA/NGC (Formerly NTDC)	Yes
The financial evaluation will be carried out as per Amendment-V of NTDC Specifications DDS-84: 2020 and keeping in view the Total Owning cost (TOC).	Yes

Evaluation Criteria

Eligibile bidder(s) with substantially responsive bid(s) offering **Least Cost Based Selection (LCBS)** shall be consider for the award of contract(s).

Least Cost Based Selection (LCBS)

PUBLIC PROCUREMENT REGULATORY AUTHORITY (PPRA) EPADS

Items/Lots

Items Without Lots :

Item	UNSPSC	Delivery Schedule	Quantity	Bid Security	Warranty
630 KVA Pole Mounted Distribution Transformer	Distribution power transformers	**Address:** IESCO Regional Store, Rawalpindi/Rajjar/Islamabad **Schedule:** 60 Days from the date of issuance of PO **Quantity:** 30/Nos	30/Nos	1317000 PKR	24 Months

Related Services of Goods:

No

Items/Lot Specification

Items Without Lots :

Item: 630 KVA Pole Mounted Distribution Transformer

UNSPSC: Distribution power transformers

Specifications / Requirementsss:

As Per NTDC Specifications DDS-84: 2020 (Amended to date)

PUBLIC PROCUREMENT REGULATORY AUTHORITY (PPRA) EPADS

Price Schedule

For Individual Items

#	Item Title	Quantity	Unit Price (PKR)	Total Price (PKR)	Delivery Location	Delivery Period / Year	Country of Origin
1							
2							

For Lots

#	Lot Title	Total Lot Price (PKR)	Country of Origin
1	[Lot 1 Title]		

PUBLIC PROCUREMENT REGULATORY AUTHORITY
(PPRA)
EPADS

General Conditions of Contract

A. General

1. Definitions

1.1 Unless the context otherwise requires, the following terms whenever used in this Contract shall have the same meaning and shall be interpreted as indicated

a. “Applicable Law” means the laws and any other instruments having the force of law in the Government’s Country, or in such other country as may be specified in the Special Conditions of the Contract (SC), as they may be issued and in force from time to time;

b. The “Arbitrator” is the person appointed with mutual consent of both the parties, to resolve contractual disputes as provided for in the General Conditions of the Contract GCC Clause 35 hereunder.

c. “Authority” means Public Procurement Regulatory Authority.

d. The “Commencement Date” is the date when the Supplier shall commence execution of the contract as specified in the SCC.

e. “Completion date” means the date of completion of the Contract by the Bidder as certified by the Procuring Agency.

f. “Procuring Agency” means:-

a. any Ministry, Division, Department or any Office of the Government;

b. any authority, corporation, body or organization established by or under a Law or which is owned or controlled by the Government;.

g. “The Contract” means an agreement enforceable by law;

h. “The Contract Price” means the price payable to the Bidder under the Contract for the full and proper performance of its contractual obligations;

i. “Ancillary Services” means those services ancillary to the provision of Goods, such as transportation and insurance, and any other incidental services, such as installation, commissioning, provision of technical assistance, training, and other such obligations of the Bidder covered under the Contract;

j. “GCC” means the General Conditions of Contract contained in this section;

k. “SCC” means the Special Conditions of Contract by which the GCC may be amended or supplemented;

l. **“**Day” means calendar day unless indicated otherwise.

m. “Defective Goods” are those goods which are below standards, requirements or specifications stated by the Contract.

n. “Delivery” means the transfer of the goods from the supplier equipment, machinery, and /or other materials which the Supplier is required to supply to the Procuring Agency under Contract.

o. “Effective Date” means the date on which this Contract comes into force and effect.

p. “Force Majeure” means an unforeseeable event which is beyond reasonable control of either Party and which makes a Party’s performance of its obligations under the Contract impossible or so impractical as to be considered impossible under the circumstances.

For the purposes of this Contract, “Force Majeure” means an event which is beyond the reasonable control of a Party, is not foreseeable, is unavoidable, and its origin is not due to negligence or lack of care on the part of a Party, and which makes a Party’s performance of its obligations hereunder impossible or so impractical as reasonably to be considered impossible in the circumstances. and includes, but is not limited to, war, riots, civil disorder, earthquake, fire, explosion, storm, flood, epidemics, or other adverse weather conditions, strikes, lockouts or other industrial action (except where such strikes, lockouts or other industrial action are within the power of the Party invoking Force Majeure to prevent), confiscation or any other action by Government agencies.

q. The Bidder” means the individual or corporate body whose Bids to provide the Goods has been accepted by the Procuring Agency;

r. “The Project Site,” where applicable, means the place or places named in Bids Data Sheet and technical Specifications;

s. “Government” means the Government of Pakistan;

t. “Subcontractor” means any entity to which the Bidder subcontracts any part of the Goods.

u. The “Services” means the work to be performed by the Bidder pursuant to this Contract and as prescribed in the Specifications and Schedule of Activities included in the Bidder’s Bids;

v. “Party” means the Procuring Agency or the Bidder, as the case may be, and “Parties” means both of them;

w. “Foreign Currency” means any currency other than the currency of the country of the Procuring Agency;

x. “Completion Date” means the date of completion of the contract by the Bidder as certified by the Procuring Agency;

y. “In Writing” means communicated in written form with proof of receipt;

z. “Local Currency” means the currency of Pakistan;

a. “Origin” means the place where the Goods were mined, grown, or produced or from which the Services are supplied. Goods are produced when, through manufacturing, processing, or substantial and major assembly of components, a commercially recognized new produce results that is substantially different in basic characteristics or in purpose or utility from its components.

b. “Specification” means the Specification of the Goods and performance of incidental services in accordance with the relevant standards included in the Contract and any modification or addition made or approved by the Procuring Agency.

c. “Procuring Agency” means: -
any Ministry, Division, Department or any Office of the Federal Government;
any authority, corporation, body or organization established by or under a Federal Law or which is owned or controlled by the Federal Government;

2. Application and Interpretation

2.1 These General Conditions shall apply to the extent that they are not superseded by provisions of other parts of the Contract.

2.2 In interpreting these Conditions of Contract headings and marginal notes are used for convenience only and shall not affect their interpretations unless specifically stated; references to singular include the plural and vice versa; and masculine include the feminine. Words have their ordinary meaning under the language of the Contract unless specifically defined.

3. Applicable Law

3.1 The contract shall be governed and interpreted in accordance with the laws of Pakistan, unless otherwise specified in SCC.

4. Governing Language

4.1 The Contract as well as all correspondence and documents relating to the Contract exchanged between the Bidder and the Procuring Agency, shall be written in the **English language** unless otherwise stated in the **SCC**. Supporting documents and printed literature that are part of the Contract may be in another language provided these are accompanied by an accurate translation of the relevant passages in English, in which case, for purposes of interpretation of the Contract, this translation shall govern.

5. Notices

5.1 Any notice, request, or consent made pursuant to this Contract shall be in writing and shall be deemed to have been made when delivered in person to an authorized representative of the Party to whom the communication is addressed, or when sent by registered mail, telex, telegram, or facsimile to such Party at the address specified in the **SCC**.

6. Standard

6.1 The Goods supplied under this Contract shall conform to the standards mentioned in the Technical Specifications, and, when no applicable standard is mentioned, the American Standards (such as ACI, IEEE, ASME, etc.) or the Pakistani standards such as PSQCA Such standards shall be the latest issued by the concerned institution.

7. Delivery/Location

7.1 The Goods shall be delivered to such locations as the Procuring Agency may approve and as specified in SCC.

8. Authorized Representatives / Authority of Member in charge

8.1 Any action required or permitted to be taken, and any document required or permitted to be executed, under this Contract by the Procuring Agency or the Bidder may be taken or executed by the officials specified in the **SCC**.

B. Commencement, Completion, Modification, and Termination of Contract

8. Effectiveness of Contract

8.1 This Contract shall come into effect on the date the Contract is signed by both parties and such other later date as may be stated in the SCC.

9. Commencement of the Contract

9.1 The Bidder shall confirm availability of Key Experts and begin carrying out the Services not later than the number of days after the Effective Date specified in the SCC.

10. Program

10.1 Before commencement of the Contract, the Bidder shall submit to the Procuring Agency for approval a Program showing the general methods, arrangements, order and timing for all activities. The Services shall be carried out in accordance with the approved Program as updated.

11. Starting Date/Expiration Date

11.1 The Bidder shall start carrying out the Services Five (05) days after the date the Contract becomes effective, or at such other date as may be specified in the **SCC.**

11.2 Unless terminated earlier pursuant to Clause **GCC 16** hereof, this Contract shall expire at the end of such time period after the Effective Date as specified in the SCC.

12. Entire Agreement

12.1 This Contract contains all covenants, stipulations and provisions agreed by the Parties. No agent or representative of either Party has authority to make, and the Parties shall not be bound by or be liable for, any statement, representation, promise or agreement not set forth herein.

13. Modification

13.1 Any modification or variation of the terms and conditions of this Contract, including any modification or variation of the scope, may only be made by written agreement between the Parties. However, each Party shall give due consideration to any Bids for modification or variation made by the other Party.

13.2 In cases of any modifications or variations, the prior written consent of the Procuring Agency is required.

14. Force Majeure

14.1 Definition

For the purposes of this Contract, "Force Majeure" means an event which is beyond the reasonable control of a Party and which makes a Party's performance of its obligations under the Contract impossible or so impractical as to be considered impossible under the circumstances.

14.2 No Breach of Contract

The failure of a Party to fulfill any of its obligations under the contract shall not be considered to be a breach of, or default under, this Contract in so far as such inability arises from an event of Force Majeure, provided that the Party affected by such an event (a) has taken all reasonable precautions, due care and reasonable alternative measures in order to carry out the terms and conditions of this Contract, and (b) has informed the other Party as soon as possible about the occurrence of such an event.

14.3 Extension of Time

Any period within which a Party shall, pursuant to this Contract, complete any action or task, shall be extended for a period equal to the time during which such Party was unable to perform such action as a result of Force Majeure. However, such period shall not exceed sixty (60) days.

14.4 Payments

During the period of their inability to perform the Services as a result of an event of Force Majeure, the Bidder shall be entitled to continue to be paid under the terms of this Contract, as well as to be reimbursed for additional costs reasonably and necessarily incurred by them during such period for the purposes of the Services and in reactivating the Service after the end of such period.

15. Termination

15.1 By the Procuring Agency

The Procuring Agency may terminate this Contract in case of the occurrence of any of the events specified in paragraphs (a) through (e) of this Clause. In such an occurrence the Procuring Agency shall give at least thirty (30) calendar days' written notice of termination to the Bidder in case of the events referred to in (a) through (d); at least sixty (60) calendar days' written notice in case of the event referred to in (e);

a. If the Bidder fails to remedy a failure in the performance of its obligations hereunder, as specified in a notice of suspension;

b. If the Bidder becomes (or, if the Bidder consists of more than one entity, if any of its members becomes) insolvent or bankrupt or enter into any agreements with their creditors for relief of debt or take advantage of any law for the benefit of debtors or go into liquidation or receivership whether compulsory or voluntary;

c. If the Bidder fails to comply with any final decision reached as a result of arbitration proceedings;

d. If, as the result of Force Majeure, the Bidder is unable to perform a material portion of the Services for a period of not less than sixty (60) calendar days;

e. If the Procuring Agency, in its sole discretion and for any reason whatsoever, decides to terminate this Contract;

15.2 By the Bidder

The Bidder may terminate this Contract, by not less than thirty (30) calendar days' written notice to the Procuring Agency, in case of the occurrence of any of the events specified in paragraphs (a) through (d) of this Clause.

a. If the Procuring Agency fails to pay any money due to the Bidder pursuant to this Contract and not subject to dispute within forty-five (45) calendar days after receiving written notice from the Bidder that such payment is overdue.

b. If, as the result of Force Majeure, the Bidder is unable to perform a material portion of the Services for a period of not less than sixty (60) calendar days.

c. If the Procuring Agency fails to comply with any final decision reached as a result of arbitration.

d. If the Procuring Agency is in material breach of its obligations pursuant to this Contract and has not remedied the same within forty-five (45) days (or such longer period as the Bidder may have subsequently approved in writing) following the receipt by the Procuring Agency of the Bidder's notice specifying such breach.

C. Obligations of the Bidder

16. General

16.1 Standard of Performance

1. The Bidder shall deliver the product and carry out the Services with all due diligence, efficiency and economy, in accordance with generally accepted professional standards and practices, and shall observe sound management practices, and employ appropriate technology and safe and effective equipment, machinery, materials and methods. The Bidder shall always act, in respect of any matter relating to this Contract or to the Services, as a faithful adviser to the Procuring Agency, and shall at all times support and safeguard the Procuring Agency's legitimate interests in any dealings with the third parties.

16.2 Law Applicable to Goods

The Bidder shall deliver the goods in accordance with the Contract and in accordance with the Law of Pakistan and shall take all practicable steps to ensure that any of its Experts and Sub-Bidders, comply with the Applicable Law.

17. Conflict of Interests

17.1 Bidder Not to Benefit from Commissions and Discounts.

The remuneration of the Bidder shall constitute the Bidder's sole remuneration in connection with this Contract or the Services, and the Bidder shall not accept for their own benefit any trade commission, discount, or similar payment in connection with activities pursuant to this Contract or to the Services or in the discharge of their obligations under the Contract, and the Bidder shall use their best efforts to ensure that the Personnel, any Subcontractors, and agents of either of them similarly shall not receive any such additional remuneration.

17.2 Bidder and Affiliates Not to be Otherwise Interested in Project

The Bidder agree that, during the term of this Contract and after its termination, the Bidder and its affiliates, as well as any Subcontractor and any of its affiliates, shall be disqualified from providing Goods for any project resulting from or closely related to the Services.

17.3 Prohibition of Conflicting Activities

Neither the Bidder nor its Subcontractors nor the Personnel shall engage, either directly or indirectly, in any of the following activities:

a. during the term of this Contract, any business or professional activities in the Government's country which would conflict with the activities assigned to them under this Contract;

b. during the term of this Contract, neither the Bidder nor their Subcontractors shall hire public employees in active duty or on any type of leave, to perform any activity under this Contract;

18. Confidentiality

18.1 Except with the prior written consent of the Procuring Agency, the Bidder and the Experts shall not at any time communicate to any person or entity any confidential information acquired in the course of the contract.

19. Insurance to be Taken Out by the Bidder

19.1 The Bidder(a) shall take out and maintain, and shall cause any Subcontractors to take out and maintain, at its (or the Subcontractors', as the case may be) own cost but on terms and conditions approved by the Procuring Agency, insurance against the risks, loss or damage, and for the coverage, as shall be specified in the SCC; and (b) at the Procuring Agency's request, shall provide evidence to the Procuring Agency showing

that such insurance has been taken out and maintained and that the current premiums have been paid.

20. Bidder's Actions Requiring Procuring Agency's Prior Approval

20.1 The Bidder shall obtain the Procuring Agency's prior approval in writing before taking any of the following actions:

(a) appointing such members of the Personnel not provided by the Bidder;

(b) changing the Program of activities; and

(c) any other action that may be specified in the SCC.

21. Reporting Obligations

21.1 The Bidder shall submit to the Procuring Agency the reports and documents in the numbers, and within the periods as prescribed by the Procuring Agency.

22. Liquidated Damages

22.1 If the Supplier fails to deliver any or all of the Goods or to perform the Services within the period(s) specified in the Contract, the Procuring Agency shall, without prejudice to its other remedies under the Contract, deduct from the Contract Price, as liquidated damages, a sum equivalent to the percentage specified in **SCC** of the delivered price of the delayed Goods or unperformed Services for each week or part thereof of delay until actual delivery or performance, up to a maximum deduction of the performance security (or guarantee) specified in **SCC**. Once the said maximum is reached, the Procuring Agency may consider termination of the Contract pursuant to **GCC Clause 16.**

22.2 Correction for Over-payment

If the Intended Completion Date is extended after liquidated damages have been paid, the Procuring Agency shall correct any overpayment of liquidated damages by the Bidder by adjusting the next payment certificate. The Bidder shall be paid interest on the overpayment, calculated from the date of payment to the date of repayment, at the rates specified in SCC.

22.3 Lack of performance penalty

If the Bidder has not corrected a Defect within the time specified in the Procuring Agency's notice, a penalty for Lack of performance will be paid by the Bidder. The amount to be paid will be calculated as a percentage of the cost of having the Defect corrected, assessed as specified in the SCC.

23. Performance Guarantee

23.1 The Performance Security (or Guarantee) shall be provided to the Procuring Agency no later than the date specified in the Letter of Acceptance and shall be issued in an amount and form acceptable to the Procuring Agency as specified in SCC, and denominated in the types and proportions of the currencies in which the Contract Price is payable as specified in the SCC.

23.2 Within Seven (07) days from the issuance of acceptance letter from the Procuring Agency, the successful Bidder shall furnish the Performance Guarantee in shape of ------- at the discretion of the PA in the amount **specified in SCC.** In case the amount of Bids security is equal or greater than

23.3 The proceeds of the Performance Guarantee shall be payable to the Procuring agency as compensation for any loss resulting from the Supplier's failure to complete its obligations under the Contract.

23.4 The Performance Guarantee shall be denominated in the currency of the Contract, or in a freely convertible currency acceptable to the Procuring agency and shall be in the acceptable form as specified in SCC.

23.5 The Performance Guarantee will be discharged by the Procuring agency and returned to the Supplier not later than thirty (30) days following the date of completion of the Supplier's performance obligations under the Contract, including any warranty obligations, unless otherwise **specified in SCC.**

23.6 The bid security of the successful bidder shall not be substituted with the Performance Guarantee.

24. Fraud and Corruption

24.1 The Procuring Agency requires the Supplier to disclose any commissions or fees that may have been paid or are to be paid to agents or any other party with respect to the Bidding process or execution of the Contract. The information disclosed must include at least the name and address of the agent or other party, the amount and currency, and the purpose of the commission, gratuity or fee.

25. Sustainable Procurement

25.1 The Bidder shall conform to the sustainable procurement contractual provisions, if and as specified in the SCC.

D. Bidder's Personnel

26. Description of Personnel

26.1 The titles, agreed job descriptions, minimum qualifications, and estimated periods of engagement in the carrying out of the Services of the Bidder's Key Personnel. The Key Personnel listed by title as well as by name are hereby approved by the Procuring Agency.

27. Removal and/or Replacement of Personnel

27.1 Except as the Procuring Agency may otherwise agree, no changes shall be made in the Key Personnel. If, for any reason beyond the reasonable control of the Bidder, it becomes necessary to replace any of the Key Personnel, the Bidder shall provide as a replacement a person of equivalent or better qualifications.

27.2 If the Procuring Agency finds that any of the Personnel have (i) committed serious misconduct or have been charged with having committed a criminal action, or (ii) have reasonable cause to be dissatisfied with the performance of any of the Personnel, then the Bidder shall, at the Procuring Agency's written request specifying the grounds thereof, provide as a replacement a person with qualifications and experience acceptable to the Procuring Agency.

27.3 The Bidder shall have no claim for additional costs arising out of or incidental to any removal and/or replacement of Personnel.

E. Obligations of the Procuring Agency

28. Assistance and Exemptions

28.1 The Procuring Agency shall use its best efforts to ensure that the Government shall provide the Bidder such assistance and exemptions as specified in the SCC.

29. Change in the Applicable Law

29.1 If, after the date of this Contract, there is any change in the Applicable Law with respect to taxes and duties which increases or decreases the cost of the related Services rendered by the Bidder, then the remuneration and reimbursable expenses otherwise payable to the Bidder under this Contract shall be increased or decreased accordingly by agreement between the Parties, and corresponding adjustments shall be made to the amounts referred in the SCC.

30. Services and Facilities

30.1 The Procuring Agency shall make available to the Bidder and the Experts, for the purposes of the Services and free of any charge, the services, facilities and property described , at the times and in the manner specified in the SCC or terms of reference.

30.2 In case that such services, facilities and property shall not be made available to the Bidder, the Parties shall agree on (i) any time extension that it may be appropriate to grant to the Bidder for the performance of the Services, (ii) the manner in which the Bidder shall procure any such services, facilities and property from other sources, and (iii) the additional payments, if any, to be made to the Bidder as a result thereof.

F. Payments to the Bidder

31. Contract Price

31.1 The price payable shall be in Pakistani Rupees unless otherwise specified in the SCC. Prices charged by the Supplier for Goods delivered under the Contract shall not vary from the prices quoted by the Supplier in its Bid.

32. Terms and Conditions of Payment

32.1 Payments will be made to the Bidder according to the payment schedule stated in the SCC and as per actual invoice submitted by the Bidder.

32.2 Unless otherwise stated in the SCC, the advance payment shall be made against the provision by the Bidder of a bank guarantee for the same amount, and shall be valid for the period stated in the SCC. Any other payment shall be made after the conditions listed in the SCC for such payment have been met, and the Bidder have submitted an invoice to the Procuring Agency specifying the amount due.

33. Currency of Payment

33.1 Any payment under this Contract shall be made in the currency(ies) specified in the SCC.

G. Quality Control

34. Identifying Defects

34.1 The principle and modalities of Inspection of the Goods by the Procuring Agency shall be as indicated in the SCC. The Procuring Agency shall check the Bidder’s performance and notify him of any Defects that are found. Such checking shall not affect the Bidder’s responsibilities. The Procuring Agency may instruct the Bidder to search for a Defect and to uncover and test any service that the Procuring Agency considers may have a Defect. Defect Liability Period is as defined in the SCC.

35. Correction of Defects, and

Lack of Performance Penalty

35.1 The Procuring Agency shall give notice to the Bidder of any Defects before the end of the Contract. The Defects liability period shall be extended for as long as Defects remain to be corrected.

35.2 Every time notice a Defect is given, the Bidder shall correct the notified Defect within the length of time specified by the Procuring Agency's notice.

35.3 If the Bidder has not corrected a Defect within the time specified in the Procuring Agency's notice, the Procuring Agency will assess the cost of having the Defect corrected, the Bidder will pay this amount, and a Penalty for Lack of Performance.

36. Taxes and Duties

36.1 A Supplier shall be entirely responsible for all taxes, duties, fees, etc., incurred until delivery of the contracted Goods to the Procuring Agency.

H. Settlement of Disputes

37. Alternate Dispute Resolution

37.1 Upon the commencement of the Procurement Contract, any disputes arising between the contracting parties shall be resolved in accordance with Rule 66 of the Public Procurement Rules, 2026.

37.2 The procuring agency may refer the matter to the Chief Justice Islamabad High Court or Managing Director PPRA or the Secretary Ministry of Law & Justice for appointment of Arbitrator.

37.3 The fee for the Arbitrator shall be specified in Pak Rupees as determined by the appointing authority which shall be borne and shared equally by the contracting parties.

38. Change Orders

The Procuring Agency may at any time, by a written order given to the Supplier, make changes within the general scope of the Contract in any one or more of the following:

a)Drawings, designs, or specifications, where Goods to be furnished under the Contract are to be specifically manufactured for the Procuring Agency;
b)The method of shipment or packing;
c)The place of delivery; and/or
d)The Services to be provided by the Supplier.

39. Contract Amendenments

39.1 Subject to GCC Clause 32, no variation in or modification of the terms of the Contract shall be made except by written amendment signed by the parties.

40. Sub-Contracts

40.1 The Supplier shall consult the Procuring Agency in the event of subcontracting under this contract if not already specified in the Bid. Subcontracting shall not alter the Supplier's obligations.

Special Conditions of Contract

SECTION VIII. SPECIAL CONDITIONS OF CONTRACT

The following Special Conditions of Contract shall supplement the General Conditions of Contract. Whenever there is a conflict, the provisions herein shall prevail over those in the Conditions of Contract. The corresponding clause number of the GCC is indicated in parentheses.

Number of GC Clause

Amendments of, and Supplements to, Clauses in the General Conditions of Contract

Number of GC Clause 1

Definitions

The Procuring Agency is: **Islamabad Electric Supply Company (IESCO) (Material Management Directorate), Chief Engineer (MM) IESCO Headquarters, Street # 40, Sector G-7/4., Islamabad Capital Territory**

The Supplier is:

The title of the subject procurement is: **Procurement of 630 KVA Pole Mounted Distribution Transformer**

Number of GC Clause 3

Applicable/Governing Law:

The Contract shall be interpreted in accordance with the laws of Islamic Republic of Pakistan

Number of GC Clause 4

Language:

The language of the Contract, all correspondence and communications to be given, and all other documentation to be prepared and supplied under the Contract shall be in **English.**

Number of GC Clause 5

Notices:

The addresses for the notices are:

The Authority:

Islamabad Electric Supply Company (IESCO) (Material Management Directorate), Chief Engineer (MM)
IESCO Headquarters, Street # 40, Sector G-7/4., Islamabad Capital Territory
+92-319-599-1800
ce_mm@iesco.com.pk

Contractor/ Bidder:

[Name, address and telephone number].

The Contractor/ Bidder's Representative(s)

[Name, address, telephone number and e-mail address]

Number of GC Clause 7.1

The Authorized Representatives are:

For the Procuring Agency:

Islamabad Electric Supply Company (IESCO) (Material Management Directorate), Chief Engineer (MM)
IESCO Headquarters, Street # 40, Sector G-7/4., Islamabad Capital Territory
+92-319-599-1800
ce_mm@iesco.com.pk

For the Bidder:

Name: ……

Designation: ……..

Address: ……..

Number of GC Clause 8

Effectiveness of the contract

Number of GC Clause 9

Commencement of Contract:

Number of GC Clause 11.2

Expiration of Contract:

Number of GC Clause 15

Termination

In the event of termination of the contract due to any reason as already defined in the General Conditions of Contract, the Bidder shall be responsible for providing to the Authority the Goods till the time of alternate arrangements.

Number of GC Clause 17

Conflict of Interest:

The Procuring Agency reserves the right to determine on a case-by-case basis whether the Bidder should be disqualified from providing goods or services due to a conflict of a nature described in Clause GCC 17**.**

Number of GC Clause 22

Liquidated Damages

If the Bidder fails to provide services as required under the contract or in case of any data loss/data breach or any incident compromising the data security or other such failures related to any services, the Bidder shall pay to the Procuring Agency as Liquidated Damages at a rate of **0.06%** to **10.00%** of the Contract value, in accordance with the extent of performance failure & the cost of investigating such incidents as judged by the Authority.

Number of GC Clause 23

Performance Guarantee:

Instrument of Performance Guarantee shall be in the Name of : **Chief Executive Officer IESCO Islamabad**

The amount of performance guarantee shall be **5.00%** of the contract price in acceptable form of **Call at Deposit, Bank Guarantee**

Number of GC Clause 32

Payment terms:

Payment will be made to the Bidder against the procured Goods and services according to the actual invoice or running bills submitted by the Bidder against the services provided within the time given in the conditions of the contract.

Number of GC Clause 33

Currency of Payment:

All the payment to be released to the contractor/Bidder shall be in Pakistani Rupees.

Number of GC Clause 34

Identifying Defects:

The Authority reserves the right at any time to inspect the premises of the provider to inspect the goods and monitor the goods being provided.

Inspections & Tests Requirements

Inspection of material will be carried out at your works jointly by the Chief Engineer (MI) PPMC Lahore jointly with Chief Engineer (MM) IESCO Islamabad or his authorised representative(s). In order to ensure the quality of the product, selection of raw material (sample) during stage inspection shall also be carried out jointly. Necessary invoice (silicon steel & oil) will be provided to the inspection team at the time of stage inspection as well as final inspection.

Notice in writing shall have to be given to the Chief Engineer (MI) PPMC Lahore and IESCO (Simultaneously) by you when the store against the order is ready for inspection

All reasonable facilities as provided in the specifications or followed by the Industry or Trade in General shall also have to be afforded to the Inspecting Officer(s) by you at your expenses for carrying out Inspection. You will have to deposit 0.5% of the cost of the material along with the inspection call to the Chief Engineer (MI) PPMC Lahore

Note:- In view of peculiar nature of material being procured, inspection of material by the Chief Engineer (MI) PPMC or by IESCO will be carried out within Pakistan and the firm shall have to offer the material for inspection accordingly, in accordance with prescribed delivery schedule.

The Inspecting Officer may reject a part or the whole of the consignment tendered for inspection, if he found the material to be below the requirements of the particulars governing the supply given in the purchase order.In such cases:

i) The decision of the Inspecting Officer shall be binding on you.

ii) If the material are rejected as aforesaid, then without prejudice to the right of the purchaser you may submit material in replacement of those rejected but re-submission will not mean extension of delivery period. Moreover, the firm/supplier will borne the expenses for the re-inspection of the material that will be offered against the rejected ones

iii) On final rejection the purchaser shall have the following rights:-a) To purchase the rejected goods at your cost and expense.b) To terminate the contract and recover from you the loss, the IESCO thereby incurs.

In compliance to the directives of BOD IESCO in its 206th meeting held on 11.08.2021 and further communicated to all Transformer manufacturers vide IESCO letter No.7225- 36 dated:12.08.2021, following clauses are hereby incorporated in the tender documents

• The IESCO management will select transformers from each consignment (during stage and final inspection) at random at firm premises and the firm will transport them from its premises to EHV Lab Rawat to ascertain iron and copper losses.

• The cost of transportation of the randomly selected transformers from / to firm'spremises to / from EHV Lab Rawat will be borne by the said firm / vendor. However, the cost of carrying out test at EHV Lab Rawat will be borne by IESCO.

• In case the requisite test fails and values of losses are significantly higher than the quoted / claimed losses, the entire lot will be rejected.

Delivery & Documents

Delivery period is the essence of the Contract and delivery must be completed not later than the dates specified. "1st day of inspection or 15th day of inspection call whichever is earlier, shall be reckoned as date of delivery of Store to IESCO Consignee provided the goods accepted for supply have been delivered within 20-days of issue of inspection certificate;

subject to the condition that the supplier/manufacturer offers the material for inspection at least 15-days prior to the due date and the offer is not rejected due to being a fake call or material not conforming to the specification.

Upon delivery of the Goods to the transporter, the Supplier shall notify the Procuring Agency and mail the following documents to the Procuring Agency: i) one original plus four copies of the Supplier's invoice showing Goods' description, quantity, unit price, and total amount; ii) delivery note, railway receipt, or truck receipt; iii) Manufacturer's or Supplier's warranty certificate iv) Inspection certificate issued by PPMC.

v) certificate of country of origin issued by Pakistan Chamber of Commerce and Industry or equivalent authority in the country of origin in duplicate.

The above documents shall be received by Consignee before arrival of the Goods and, if not received, the Supplier will be responsible for any consequent expenses.

Number of GC Clause 37

Following is the guidance for Dispute Resolution

(a) For Contracts to be entered with foreign Contractor/ Service Provider:

All disputes arising in connection with the present Contract shall be finally settled under the Rules of Conciliation and Arbitration of the International Chamber of Commerce by one or more arbitrators appointed in accordance with said Rules.

(b) For Contracts to be entered with nationals of Pakistan:

i. If any dispute of any kind whatsoever shall arise between the Authority and the Bidder in connection with or arising out of the Contract, including without prejudice to the generality of foregoing, any question regarding its existence, validity, termination and the execution of the Contract – whether during developing phase or after their completion and whether before or after the termination, abandonment or breach of the Contract – the parties shall seek to resolve any such dispute or difference by mutual diligent negotiations in good faith within 14 (fourteen) days following a notice sent by one Party to the other Party in this regard.

ii. At future of negotiation the dispute shall be resolved through mediation and mediator shall be appointed with the mutual consent of the both parties.

iii. At the event of failure of mediation to resolve the dispute relating to this contract such dispute shall finally be resolved through binding Arbitration in accordance with GCC clause 38.

iv. The cost of the mediation and arbitration shall be shared by the parties in equal proportion however the both parties shall bear their own costs and lawyer's fees regarding their own participation in the mediation and arbitration. However, the Arbitrator may make an award of costs upon the conclusion of the arbitration making any party to the dispute liable to pay the costs of another party to the dispute.
v. Arbitration proceedings as mentioned in the above clause regarding resolution of disputes may be commenced prior to, during or after completion of the contract.

Notwithstanding any reference to the arbitration herein, the parties shall continue to perform their respective obligations under the Contract unless they otherwise agree that the Authority shall pay the Bidder any monies due to the Bidder.

Rules of procedure for arbitration proceedings:

Any dispute between the Authority and a Bidder who is a national of the Islamic Republic of Pakistan arising in connection with the present Contract shall be referred to adjudication or arbitration in accordance with the laws of the Islamic Republic of Pakistan including Arbitration Act 1940, however above provision shall prevail in referring the case to the Arbitrator.

Place of Arbitration and Award:

The arbitration shall be conducted in English language and place of arbitration shall be at Islamabad. The award of the arbitrator shall be final and shall be binding on the parties.

Bid Securing Declaration

Form 9: Bid Securing Declaration

Date: *[insert date (as day, month and year)]*

Bid No.:***P212277***

Alternative No.: **[insert identification No if this is a Bid for an alternative]**

To: **Islamabad Electric Supply Company (IESCO) (Material Management Directorate), Chief Engineer (MM) IESCO Headquarters, Street # 40, Sector G-7/4., Islamabad Capital Territory**

We, the undersigned, declare that:

We understand that, according to your conditions, Bids must be supported by a Bid Securing Declaration.

We accept that we will be blacklisted and henceforth cross debarred for participating in respective category of public procurement proceedings for a period of (not more than) six months, if fail to abide with a bid securing declaration, however without indulging in corrupt and fraudulent practices, if we are in breach of our obligation(s) under the Bid conditions, because we:

1. have withdrawn or modified our Bid during the period of Bid Validity specified in the Form of Bid;

2. Disagreement to arithmetical correction made to the Bid price; or

3. having been notified of the acceptance of our Bid by the Procuring Agency during the period of Bid Validity, (i) failure to sign the contract if required by Procuring Agency to do so or (ii) fail or refuse to furnish the Performance Security or to comply with any other condition precedent to signing the contract specified in the Bidding Documents.

We understand this Bid Securing Declaration shall expire if we are not the successful

Bidder, upon the earlier of (i) our receipt of your notification to us of the name of the successful Bidder; or (ii) twenty-eight (28) days after the expiration of our Bid.

Signed: [insert signature of person whose name and capacity are shown] In the capacity of
[insert legal capacity of person signing the Bid Securing Declaration]

Name: [insert complete name of person signing the Bid Securing Declaration]

Duly authorized to sign the Bid for and on behalf of: [insert complete name of Bidder]

Dated on day of , [insert date of signing]
Corporate Seal (where appropriate)

Contract Form

SECTION IX: CONTRACT FORMS

THIS AGREEMENT made the _____ day of _____ 20_____ between **Islamabad Electric Supply Company (IESCO) (Material Management Directorate), Chief Engineer (MM) IESCO Headquarters, Street # 40, Sector G-7/4., Islamabad Capital Territory**

(hereinafter called "the Procuring Agency") of the one part and *[name of Bidder]* of *[city and country of Bidder]* (hereinafter called "the Bidder") of the other part:

WHEREAS the Procuring Agency invited Bids for provision of goods, viz., **Procurement of 630 KVA Pole Mounted Distribution Transformer (*P212277*)** and has accepted a Bids by the Bidder for the provision of Goods in the sum of *[contract price in words and figures]* (hereinafter called "the Contract Price").

NOW THIS CONTRACT WITNESSETH AS FOLLOWS:

1. In this Contract words and expressions shall have the same meanings as are respectively assigned to them in the Conditions of Contract referred to.

2. The following documents shall be deemed to form and be read and construed as part of this Contract, In the event of any ambiguity or conflict between the Contract Documents listed below, the order of precedence shall be the order in which the Contract Documents are listed below:-

1. This form of Contract;
2. the Form of Bids and the Price Schedule submitted by the Bidder;
3. the Schedule of Requirements;
4. the Technical Specifications;
5. the Special Conditions of Contract;
6. the General Conditions of the Contract;
7. the Procuring Agency's Letter of Acceptance; and
8. [*add here: any other documents*]

3. In consideration of the payments to be made by the Procuring Agency to the Bidder as hereinafter mentioned, the Bidder hereby covenants with the Procuring Agency to provide the Goods related services and to remedy defects therein in conformity in all respects with the provisions of the Contract.

4. The Procuring Agency hereby covenants to pay the Bidder in consideration of the provision of Goods and the remedying of defects therein, the Contract Price or such other sum as may become payable under the provisions of the contract at the times and in the manner prescribed by the contract.

IN WITNESS whereof the parties hereto have caused this Contract to be executed in accordance with their respective laws the day and year first above written.

Signed, sealed, delivered by _____the _____ (for the Procuring Agency)

Witness to the signatures of the Procuring Agency:

……

Signed, sealed, delivered by _____the _____ (for the Procuring Agency)

Witness to the signatures of the Bidder: ……

PUBLIC PROCUREMENT REGULATORY AUTHORITY (PPRA) EPADS

Integrity Pact

Integrity Pact

DECLARATION OF FEES, COMMISSION AND BROKERAGE ETC. PAYABLE BYTHE SUPPLIERS OF GOODS, SERVICES & WORKS IN CONTRACTS WORTH RS.10.00 MILLION OR MORE

Contract Number: Contract Value: Contract Title:

Dated:

[Name of Supplier] hereby declares that it has not obtained or induced the procurement of any contract, right, interest, privilege or other obligation or benefit from Government of Pakistan or any administrative subdivision or agency thereof or any other entity owned or controlled by it (GoP) through any corrupt business practice.

Without limiting the generality of the foregoing [Name of Supplier] represents and warrants that it has fully declared the brokerage, commission, fee etc. paid or payable to anyone and not given or agreed to give and shall not give or agree to give to anyone within or outside Pakistan either directly or indirectly through any natural or juridical person, including its affiliate, agent, associate, broker, consultant, director, promoter, shareholder, sponsor or subsidiary, any commission, gratification, bribe, finder's fee or kickback, whether described as consultations fee or otherwise, with the object of obtaining or inducing the procurement of a contract, right, interest, privilege or other obligation or benefit in whatsoever form from GoP, except that which has been expressly declared pursuant hereto.

[Name of Supplier] certifies that it has made and will make full disclosure of all agreements and arrangements with all persons in respect of or related to the transaction with GoP and has not taken any action or will not take any action to circumvent the above declaration, representative or warranty.

[Name of Supplier] accepts full responsibility and strict liability for making and false declaration, not making full disclosure, misrepresenting fact or taking any action likely to defeat the purpose of this declaration, representation and warranty. It agrees that any contract, right interest, privilege or other obligation or benefit obtained or procured as aforesaid shall, without prejudice to any other right and remedies available to GoP under any law, contract or other instrument, be voidable at the option of GoP.

Notwithstanding any rights and remedies exercised by GoP in this regard, [Name of Supplier] agrees to indemnify GoP for any loss or damage incurred by it on account of its corrupt business practices and further pay compensation to GoP in an amount equivalent to ten time the sum of any commission, gratification, bribe, finder's fee or kickback given by [Name of Supplier] as aforesaid for the purpose of obtaining or inducing the procurement of any contract, right, interest, privilege or other obligation or benefit in whatsoever form from GoP.

Performance Guarantee Form

Performance Guarantee Form

To: **Islamabad Electric Supply Company (IESCO) (Material Management Directorate), Chief Engineer (MM) IESCO Headquarters, Street # 40, Sector G-7/4., Islamabad Capital Territory**

WHEREAS *[name of Bidder]* (hereinafter called "the Bidder") has undertaken, in pursuance of Contract No. *[reference number of the contract]* dated *[insert date]* for provision of Goods*(*hereinafter called "the Contract").

AND WHEREAS it has been stipulated by you in the said Contract that the Bidder shall furnish you with a Bank Guarantee by a reputable bank for the sum specified therein as security for compliance with the Bidder's performance obligations in accordance with the Contract.

AND WHEREAS we have agreed to give the Bidders guarantee:

THEREFORE, WE hereby affirm that we are Guarantors and responsible to you, on behalf of the Bidder, up to a total of *[amount of the guarantee in words and figures]*, and we undertake to pay you, upon your first written demand declaring the Bidder to be in default under the Contract and without cavil or argument, any sum or sums within the limits of *[amount of guarantee]* as aforesaid, without your needing to prove or to show grounds or reasons for your demand or the sum specified therein.

This guarantee is valid until the: *[insert date]*

Signature and seal of the Guarantors

_____

[name of bank or financial institution]

_____

[address]

_____

[date}

Annexure

Bid Data Sheet

For Compliance

Technical Submission (Vendor)

Document Required

See Form Under Additional Forms and Documents: **Bid Data Sheet** (page number: 73)

Bid Security Form

For Compliance

Technical Submission (Vendor)

Document Required

See Form Under Additional Forms and Documents: **Bid Security Form** (page number: 74)

Bidder Information Form

For Compliance

Technical Submission (Vendor)

Document Required

See Form Under Additional Forms and Documents: **Bidder Information Form** (page number: 75)

Declaration of Beneficial ownership

Technical Submission (Vendor)

Document Required

See Form Under Additional Forms and Documents: **Declaration of Beneficial ownership** (page number: 76)

Deviation from Technical Provisions

Technical Submission (Vendor)

Document Required

See Form Under Additional Forms and Documents: **Deviation from Technical Provisions** (page number: 79)

Deviation from Commercial/contractual conditions

Technical Submission (Vendor)

Document Required

See Form Under Additional Forms and Documents: **Deviation from Commercial/contractual conditions** (page number: 80)

Form of Bid

Technical Submission (Vendor)

Document Required

See Form Under Additional Forms and Documents: **Form of Bid** (page number: 81)

Power of Attorney

Technical Submission (Vendor)

Document Required

See Form Under Additional Forms and Documents: **Power of Attorney** (page number: 82)

Production Capacity Form

Technical Submission (Vendor)

Document Required

See Form Under Additional Forms and Documents: **Production Capacity Form** (page number: 83)

Special Conditions of Contract

Technical Submission (Vendor)

Document Required

See Form Under Additional Forms and Documents: **Special Conditions of Contract** (page number: 84)

Eligible Countries

Technical Submission (Vendor)

Document Required

See Form Under Additional Forms and Documents: **Eligible Countries** (page number: 88)

Financial Resources

Also attach following documents

(i) Income tax returns for last three (03) years.

(ii)Audited Financial Reports of last three(03) years.

(iii) Confirm and valid Bank Credit line (latest) (if any) required to establish cash flow or financial resources.

Technical Submission (Vendor)

Document Required

See Form Under Additional Forms and Documents: **Financial Resources** (page number: 89)

Specifications

Information (Read-Only)

See Form Under Additional Forms and Documents: **Specifications** (page number: 90)

Price Schedule Form

For Compliance

Technical Submission (Vendor)

Document Required

See Form Under Additional Forms and Documents: **Price Schedule Form** (page number: 152)

Procurement Forms

Past Experience and Completed Contracts

See Form Under Additional Forms and Documents: **Past Experience and Completed Contracts** (page number: 153)

Historical Contract Non-Performance, and Pending Litigation and Litigation History

See Form Under Additional Forms and Documents: **Historical Contract Non-Performance, and Pending Litigation and Litigation History** (page number: 154)

Current Contracts and Their Progress

See Form Under Additional Forms and Documents: **Current Contracts and Their Progress** (page number: 156)

Financial Capacity and Net Worth Evaluation Form

See Form Under Additional Forms and Documents: **Financial Capacity and Net Worth Evaluation Form** (page number: 157)

Average Annual Turnover

See Form Under Additional Forms and Documents: **Average Annual Turnover** (page number: 159)

PUBLIC PROCUREMENT REGULATORY AUTHORITY
(PPRA)
EPADS

Additional Forms and Documents

Bid Data Sheet (BDS)

The following specific data for the goods to be procured shall complement, supplement, or amend the provisions in the Instructions to Bidders (ITBs). Whenever there is a conflict, the provisions herein shall prevail over those in ITBs.

BDS Clause Number	ITB Number	Amendments of, and Supplements to, Clauses in the Instruction to Bidders
Award of Contract		
1.	**37.1**	***(i) IESCO reserves the right to increase/decrease the tender quantity upto 15% at the time of issuance of LOI / purchase order.*** ***OR*** ***(ii) The IESCO reserves the right to increase or decrease the quantity of the supply during the currency of contract up to 15%. Currency of contract will be upto six months from the issuance of PO;*** ***OR*** ***the actual delivery of goods if more than six months***
2.	**-**	***If the prototype expires before/after award of contract, bidder will be required to get it renewed within the delivery schedule and without affecting the delivery schedule after contract award.***

Stamp & Signature of Bidder

PUBLIC PROCUREMENT REGULATORY AUTHORITY (PPRA) EPADS

Bid Security Form

To: IESCO

Whereas _____ (hereinafter called "the Bidder") has submitted its Bid dated _____ for the delivery of _____ (hereinafter called "the Bid").

KNOW ALL PEOPLE by these presents that WE _____of _____, having our registered office at _____ (hereinafter called "the Bank"), are bound unto *IESCO* (hereinafter called "the Procuring Agency") in the sum of _____ for which payment well and truly to be made to the said Procuring Agency, the Bank binds itself, its successors, and assigns by these presents.

Sealed with the Common Seal of the said Bank this _____ day of _____ 20_____
.

THE CONDITIONS of this obligation are:

1. If the Bid

   (a) have withdrawn or modified our Bid during the period of Bid Validity specified in the Form of Bid;

   (b) Disagreement to arithmetical correction made to the Bid price; or

   (c) having been notified of the acceptance of our Bid by the Procuring Agency during the period of Bid Validity, (i) failure to sign the contract if required by Procuring Agency to do so or (ii) fail or refuse to furnish the Performance Security or to comply with any other condition precedent to signing the contract specified in the Bidding Documents.

2. We undertake to pay to the Procuring Agency up to the above amount upon receipt of its first written demand, without the Procuring Agency having to substantiate its demand, provided that in its demand the Procuring Agency states the amount claimed by it is due to it, owing to the occurrence of one or both of the conditions, specifying the occurred condition or conditions.

This guarantee shall remain in force up to and including twenty-eight (28) days after the period of Bid Validity, and any demand in respect thereof should reach the Bank not later than the above date.

Name:…….. in the capacity of …….. signed

[Signature of the Bank]

Dated on _____day of _____20_____

Stamp and Signature of bidder

Bidder Information Form

Date of Bid Submission: _____
Request for Tender No.: _____

1. Bidder's Name: _____
2. In case of JV, legal name of each member: _____
3. Bidder's actual or intended country of registration: _____ _____
4. Bidder's year of registration: _____ _____
5. Bidder's Address in country of registration: _____ _____
6. Bidder's Authorized Representative Information Name: _____ CNIC No._____ Address: _____ _____ Telephone/Fax numbers: _____ Email Address: _____

Note:-

The Bidder shall fill in this Form in accordance with the instructions. No alterations to its format shall be permitted and no substitutions shall be accepted

Stamp and Signature of bidder

DECLARATION OF BENEFICIAL OWNERSHIP INFORMATION FOR PUBLIC PROCURMENT OF CONTRACTS

The "**Declaration of Beneficial Owners**" Information of Public Procurement Contract Awarded Regulations, 2022" require that all procuring agencies while engaging in public procurement contract worth Rs. 50 Million and above shall make a mandatory provision of beneficial ownership information of the company in the said contract as prescribed in following performa to these regulations. The procuring agencies while entering into such contracts shall publicize the beneficial ownership information of the company on PPRA's website. The procuring agency shall forward all such contracts containing the beneficial ownership information to the Authority for placing it on PPRA'S website.

1. Name _____
2. Father's Name / Spouse's Name _____
3. CNIC / NICOP / Passport No. _____
4. Nationality _____
5. Residential Address _____
6. Email Address _____
7. Date on which shareholding control or interest acquired in the business _____
8. In case of indirect shareholding control or interest being exercised through intermediary companies, entries or other legal persons or legal arrangements in the chain of ownership or control following additional particulars to be provided:

1	2	3	4	5	6	7	8	9	10
Name	Legal form (company)/ limited liability partnership / association of persons / Single Member company / partnership firm / trust any other individual body corporate (to be specified)	Date of incorporation / registration	Name of registering authority	Business Address	Country	Email Address	Percentage of shareholding control or interest of BO in the legal person or legal arrangement	Percentage of shareholding control or interest of legal person or legal arrangement in the company	Identity of natural person who ultimately owns or controls the legal person or arrangement

9. Information about the Board of Directors (Details shall be provided regarding number of shares in the capital of the company as set opposite respective names).

1	2	3	4	5	6	7	8
Name and Surname (in Block Letters)	CNIC No. (in case of foreigner passport No)	Father's / Husband's name in full	Current Nationality	Any other Nationality (ies)	Occupation	Residential address in full of the registered / principal office address for a subscribers other than natural person	Number of shares taken by cash subscriber (in figures and words)

10. Any other information incidental to or relevant to Beneficial owner(s)

Name and Signature
(Person authorized to issue notice on behalf of the company)

Stamp and Signature of bidder

PUBLIC PROCUREMENT REGULATORY AUTHORITY
(PPRA)
EPADS

Deviations from Technical Provisions

Form DEV-1

DEVIATIONS FROM TECHNICAL PROVISIONS

It is presumed that the tenderer shall not take any deviation. However, if he intends to take deviations to the specified terms/specification, those must be listed in the space provided below:

Sr. No.	Clause No. / Section No.	Deviations / Clarifications

Note:- Attach additional sheets, if necessary,

Stamp and Signature of bidder

Deviations from Contractual Condition

Form DEV-II

DEVIATIONS FROM COMMERCIAL/CONTRACTUAL CONDITIONS

It is presumed that the tenderer shall not take any deviation. However, if he intends to take deviations to the specified Contractual/Commercial Conditions, those must be listed in the space provided below:

Sr. No.	Clause No. / Section No.	Deviations / Clarifications

Stamp and Signature of bidder

PUBLIC PROCUREMENT REGULATORY AUTHORITY (PPRA) EPADS

Form of Bid

Date:

To: _____

Having examined the Bidding Documents including Addenda Nos: _____, the receipt of which is hereby duly acknowledged, we, the undersigned, offer to deliver _____ in conformity with the said Bidding Documents for the sum of _____ or such other sums as may be ascertained in accordance with the Schedule of Prices attached herewith and made part of this Bid.

We declare that our Bidding price did not involve agreements with other Bidders for the purpose of Bid suppression.

We are hereby confirming [_____, to be the Appointing Authority, to appoint the adjudicator in case of any arisen disputes.

We undertake, if our Bid is accepted, to deliver the goods in accordance with the delivery schedule specified in the Schedule of Requirements.

If our Bid is accepted, we undertake to provide a Performance Security (or Guarantee) in the form, in the amounts, and within the times specified in the Bidding Documents.

We declare that, as Bidder(s) we do not have conflict of interest with reference to ITB Clause 3.3.

We agree to abide by this Bid for the Bid Validity Period specified in **BDS Clause 10**, and it shall remain binding upon us and may be accepted at any time before the expiration of that period.

We are not participating, as Bidders, in more than one Bid in this Bidding process, other than alternative offers in accordance with the Bidding Documents.

Our firm, its affiliates or subsidiaries – including any subcontractors or suppliers for any part of the contract – has not been declared ineligible by the Government of Pakistan under Pakistan's laws or official regulations.

Until a formal Contract is prepared and executed, this Bid, together with your written acceptance thereof and your notification of award, shall constitute a binding Contract between us.

We understand that you are not bound to accept the lowest or any Bid you may receive.

We certify/confirm that we comply with the eligibility requirements as per **ITB Clause 3** of the Bidding Documents

Dated this_____day of_____20_____.

*(Name)*_____

[signature]

[in the capacity of]

Duly authorized to sign Bid for and on behalf of _____

Power of Attorney (For signatory of Application)

[To be printed on a PKR 100 stamp paper]

KNOW ALL MEN BY THESE PRESENTS THAT by this Power of Attorney (**"Power of Attorney"**), _____[*Insert name firm/Company*] having its registered office at [-----],does hereby nominate, appoint and authorize Mr._____,having CNIC No._____hereinafter referred to as the **"Signatory of Application"**, to do in our name and on our behalf the following:

1. Sign and submit to_____or its authorized nominee, the Prequalification Application / Bid for "----------", in response to the tender No. ---------- Advertisement dated [---] issued by The Procuring Agency and all other documents and instruments required to submit the Bidding Documents.

2. execute all such contracts, deeds, documents and instruments as may be considered necessary and expedient in relation to the foregoing; and

3. do and carry out all other actions as may be required by the Procuring Agency in connection with the bidding process as a whole;

4. To immediately notify The Procuring Agency in writing of any impending or actual revocation as well as any change in the terms of this Power of Attorney.

5. To do in our name and on our behalf, all such acts, deeds and things necessary in connection with or incidental to our Bid in response to the above referred bidding document including signing and submission of all documents, instruments and deeds (including correcting any deficiencies or mistakes therein), attending any meetings organized by the Procuring Agency (including pre-bid conference meetings and bid opening meetings)and providing information/responses to the Procuring Agency in all matters in connection with our Bid.

We, *[Insert name of Firm/Company],* do hereby ratify and confirm whatsoever the Signatory of Application shall do by virtue of these presents and further agree that whatever the Signatory of Application shall do or cause to be done pursuant to this Power of Attorney shall be binding on us.

Furthermore, each provision of this Power of Attorney is severable and distinct from the others. The invalidity, illegality or unenforceability of any one or more provisions of this Power of Attorney at any time shall not in any way affect or impair the validity, legality and enforceability of the remaining provisions hereof.

IN WITNESS WHEREOF, we have executed this **POWER OF ATTORNEY** as of [Date].

FOR: [INSERT NAME OF APPLICANT FIRM/ COMPANY]

Signature: _____

Name:_____

Title: _____CNIC/Passport No. : _____

Specimen Signature of Appointing /Nominated /Authorized

i----------

ii----------

iii----------

Stamp and Signature of bidder

Production Capacity of Manufacturer

Sr #	Description	Factory Capacity in unit as mentioned in Price schedule
A	Total Factory Production Capacity (No. or Sets or other unit)/Year	
B	Order in Hand (No. or Sets or other unit)	
C	Expected order during execution of this contract if awarded (No. or Sets or other unit)	
D	Quantity of this order	
E	Remaining Capacity of Factory (No. or Sets or other unit) E= (A-B-C-D)	
	E≥ 0	

Stamp & Signature of Bidder

Special Conditions of Contract (SCC)

The following Special Conditions of Contract (SCC) shall supplement the GCC. Whenever there is a conflict, the provisions herein shall prevail over those in the GCC.

SCC Clause Number	Amendments of, and Supplements to, Clauses in the GCC
Performance Security (or guarantee)	
1.	The amount of performance security (or guarantee), as a percentage of the Purchase Order Price, shall be ten (5%) percent of the Contract Price in favor of CEO IESCO from Schedule Bank of Pakistan having rating A+ in shape of Bank Guarantee. Contractor will provide performance Guarantee at time of acceptance of Notification of Award/Letter of Intent.
2.	The Procuring Agency will have the right to forfeit the Security Bond / Bank Guarantee (Performance Bond):- (A) If the contractor: i) Fails to supply the goods within the time specified. ii) Commits any breach of contract. iii) Fails to account for the Import License issued on account of the purchaser. iv) Fails to account for the raw material secured by the contractor against any License or permit issued on account of the PA v) Fails to return drawings, design or any material belonging to the PA, which was to be returned in good condition to the Contracting Officer after the successful termination of the contract. (B) For other reasons specified in the Purchase Order by the PA for forfeiting the security deposit. If the forfeiture of the security deposit does not compensate the contracting officer for losses suffered due to non-delivery or breach of contract or for any other reasons, the PA will have a right to forfeit other security deposits or to recover the same from any other security deposit made in favor of any other unit of DISCOs/GENCOs/NTDC/WAPDA/IESCO or from any money due to the Contractor from any unit of DISCOs/GENCOs/NTDC/WAPDA/IESCO.
3.	After delivery and acceptance of the Goods, 100% percent of the Performance Security (or guarantee) shall be withheld to cover the Supplier's warranty obligations.
Payment	
4.	The method and conditions of payment to be made to the Supplier under this Contract shall be as follows: **Payment for Goods supplied :** 100% payment will be made by the Finance Director IESCO Islamabad, out of budget head_____ on production of following documents after necessary pre-audit: i. Bill in triplicate duly signed and stamped mentioning clearly NTN No. & GST No. ii. Delivery Challan and GRN duly stamped and signed by the consignee (in original) iii. Warranty certificate iv. Inspection certificate issued by the Chief Engineer (Material Inspection) PPMC, Lahore or his authorized representative or by IESCO not below the rank of Dy. Director (Inspection). v. Certificate issued by the Chief Engineer (MM), IESCO Islamabad regarding acceptance of Performance Bond vi. Certificate from Excise & Taxation Department, certifying the fact that all payable professional taxes have been paid by the supplier. vii. General Sales Tax Invoice. viii. Custom clearance certificate (if material is purchased from abroad) ix. Certificate issued from consignee store Manager that material received vides GRN No. _____ dated _____ has been taken on stock against stock code No. _____ OR Finance Director IESCO will establish a confirmed and irrevocable Letter of Credit for Rs. _____/- through any nationalized bank of Pakistan in your favour. All charges relating to opening of Letter of Credit and negotiation thereon, shall be borne by you. The amount of material excluding General Sales Tax i.e. Rs. _____/- in the Letter of Credit shall be available for negotiation and en-cashable on submission of following documents:- i) Bill in triplicate mentioning clearly NTN No. & GST No. ii) Delivery Challan and GRN duly stamped and signed by the consignee iii) Warranty certificate iv) Inspection certificate issued by the Chief Engineer (MI) PPMC, Lahore or his authorized representative or by IESCO not below the rank of Dy. Director (Inspection)

	v) Certificate issued by the Chief Engineer (MM), IESCO Islamabad regarding acceptance of Performance Bond (in case of first claim only) vi) Certificate from Excise & Taxation Department, certifying the fact that all payable professional taxes have been cleared by the supplier. vii) General Sales Tax Invoice. viii) Certificate issued from consignee store Manager that material received vide GRN No. ___ dated ___ has been taken on stock against stock code No. __ The payment of amount of 18% General Sales Tax i.e. Rs. _____**/-** in the Letter of Credit shall be available for negotiation and en-cashable on production of General Sales Tax invoice and General Sales Tax return cum payment challan. **Note:-** i) All these documents enumerated in payment clause of P.O shall however, be got pre-audited by Finance Director IESCO before invoking the L/C and release of payment by the bank. ii) The expenditure will be charged to _____. iii) Partial deliveries and part payments are allowed. Moreover, the payment of Sales Tax @ 18% shall be made on production of Sales Tax Invoice and Sales Tax return cum payment Challan along with Sale Summary. Amount of sales tax invoice must be cross-verified from sales summary filed to FBR along with sales tax return. In case you pay lump sum Sales Tax for multi goods production, you will also submit an affidavit on non-judicial paper that "the challan includes the amount of Rs. _____ of sales tax for supply of _____ against P.O No. _____ dated____. Note:- Partial deliveries and part payments are allowed but not advance payment.
Delays in Supplier's Performance	
5.	a) Extension of Time shall be considered by the Procuring Agency (PA) on following grounds: 1) If delay is beyond the control of the Supplier and it is claimed that circumstances fall under the FORCE MAJEURE clause, extension may be allowed in the delivery period without imposing penalty i.e. liquidated damages as mentioned in the contract. 2) If delay is on the part of inspector nominated by IESCO at the time of inspection call. * The supplier is bound to submit its request for extension within 15 days from the occurrence of such event. b) Extension of Time shall not be considered by the Procuring Agency (PA) for the following reasons. 1) Contractor does not issue inspection call 2) Delay on the part of the contractor in the arrangement of raw materials. 3) Defect or failure occurring to any machinery or equipment installed at the contractor works during the currency of the contract. 4) Any other delay caused by the contractor or its person (s) without notification to purchaser. The extension in the delivery period is not allowed as a matter of routine as and when demanded by the Suppliers. Only in exceptional cases, an extension be granted in the delivery schedule as mentioned above.
Liquidated Damages	
6.	To recover from you liquidated damages levied at the rate of (0.06%) per day or a fraction thereof subject to a maximum of ten percent (10%) of the Contract price (Liquidated damages will be deducted only on those materials which are undelivered during contract delivery period), except: a. Where un-delivered stores (material) hold up the use of other stores (material), liquidated damages shall be levied on the total value of the Contract. b. The recovery of liquidated damages mentioned above can be effected from any payment due to you from any unit of DISCOs or NTDC
Termination for Default	
7.	If you fail to deliver the stores or any consignment thereof within the specified delivery period, the purchaser shall be entitled at his option either:- i) To recover liquidated damages ii) To purchase from elsewhere without notice to you at your risk and cost, the stores not delivered, without canceling the contract in respect of the consignment not yet due for delivery, or iii) To cancel the contract at your risk and cost. In the event of action being taken under (ii) or (iii) above, you shall be liable for any loss which the purchaser may suffer on that account, but you shall not be entitled to any gain on repurchase made against the supply order. Moreover, if the maximum limit of LD is reached the Procuring Agency may consider termination of contract. (B) If during the course of execution of Contract, you are black-listed by GENCOs/WAPDA/DISCOs/NTDC/IESCO, the purchaser may proceed with all or any of the actions detailed below:-

	i) To allow the contract to run its course till completed in accordance with the terms and conditions of Contract. ii) To stop further supplies with or without financial repercussions. iii) To cancel the contract with or without reservation of rights. (C) You may be blacklisted / debarred from future business with IESCO/DISCOS on the following grounds including the ones prescribed in the IESCO mechanism of blacklisting & PPRA Rules,2026: i) Making false statements and allegations to gain undue advantage. ii) Commission of fraud. iii) Fail to perform the contractual obligations. iv) Fail to fulfill the technical provision of the Purchase Order during the execution of contract or breaches the contract. v) Fail to deliver the material as per the delivery schedule mentioned in the Purchase Order. vi) Commission of embezzlement, criminal breach of trust, theft, cheating, forgery, bribery, falsification or destruction of records, receiving stolen property, false use of a trademark, securing fraudulent registration, giving false evidence, furnishing of false information of serious nature IESCO Mechanism for Blacklisting of contractor/supplier/manufacturer/consultant/firm available on IESCO's website. https://iesco.com.pk/images/downloads/Final-SOP-for-Blackllisting-Original-27-12-2019.pdf Moreover, the procedure/timelines for the blacklisting of the contractor/supplier/manufacturer/consultant/firm will be in accordance with Rule-25 of PPRA Rules, 2026. *It will be presumed that bidder has gone through the contents and is agreed with IESCO mechanism available on IESCO's Website.*
Force Majeure	
8.	The right of the IESCO to terminate the Contract, or to claim penalty or to liquidated damages shall be subject to the following circumstances, provided as a result of all or any of these events there has been delay in the performance of the contract by the Manufacturer or Supplier, or the contract has become incapable of being performed:- i) Act of God. ii) Act of State, War or any Act of the Enemy. iii) Lock outs, Riots or Civil Commotion. iv) Injunction granted by a Court of Competent jurisdiction not resulting from any fault of the Manufacturer or Suppliers. v) Restriction imposed by the government on the Import of any material relating to the manufacture of goods. vi) Non-receipt of raw material from abroad for reasons beyond the control of the manufacturer. vii) Port delays due to bunker age or lighter age. viii) Diversions of supplies by the Carrier without any fault or knowledge of the manufacturer or supplier. Provided further that the Manufacturer/supplier has given notice to the IESCO within 14-days of the happening of any such event.
Packing	
9.	The supplier will be responsible for packing the store suitable for transit by Rail / Road so as to ensure their being free from loss or damage on arrival at destination. The packing of the stores shall be done by and at supplier's expense in accordance with the standard specifications governing such packing. In case there are no standard specifications, goods will be packed according to the trade practice to ensure safe receipt at destination
Warranty	
10.	The supplier will furnish a Warranty Certificate, certifying that the goods supplied conform exactly to the Specifications laid down in the Contract and are brand new and that in the event of the material being found defective or not conforming to the Specifications/Particulars governing supply at the time of delivery and for a period of **24-months** from the date of completion of supply, the supplier will be held responsible for all losses and that the unacceptable goods shall be substituted with the acceptable at your expense & cost.

11.	The Bidder shall sign each page of IESCO Blacklisting Mechanism provided in the Bidding document in addition to PPRA Rule-25, 2026, which shall be the part of Contract Agreement. For the Contracts/POs amounting to more than PKR 50 Million, the Supplier's **"Declaration of Beneficial Owner (s) Information as per PPRA SRO 592(I)/2022 dated 10.05.2022"** on prescribed proforma shall be part of the Contract agreement.
12.	The period for correction of defects in the warranty period is: **Fifteen (15) Days.**
13.	Procuring Agency's address for notice purposes: **Chief Engineer (MM)** **IESCO Head office, Street No. 40,** **Sector G-7/4, Islamabad** Supplier's address for notice purposes: _____

PUBLIC PROCUREMENT REGULATORY AUTHORITY (PPRA) EPADS

ELIGIBLE COUNTRIES

All the bidders are allowed to participate in the subject procurement without regard to nationality, except bidders of some nationality, prohibited in accordance with policy of the Federal Government.

Following countries are eligible to participate in the procurement process:

"All countries of world with whom Islamic Republic of Pakistan have commercial relations and for which no Trade Embargo has been imposed by the Government of Pakistan"

Ministry of Interior, Government of Pakistan has notified List of Business-Friendly Countries (BVL), information can be accessed through following link:

http://www.dgip.gov.pk/Files/Visa%20Categories.aspx
https://visa.nadra.gov.pk/business-visa-list-bvl/

Financial Resources

Specify proposed sources of financing, such as liquid assets, unencumbered real assets, lines of credit, and other financial means, after deduction of current commitments, available to meet the total orders cash flow demands of the subject contract or contracts.

Financial Resources		
No.	**Source of financing along with supporting documents (must be attached)**	**Amount (Pak Rupee equivalent)**
1	**Working Capital**	
2	**Un-availed Credit Line**	
3	**Any other financial mean**	
4	**Total of Current commitment**	
5	**Net Financial Resource (1+2+3-4)**	

1. Latest and valid credit line facility shall be provided otherwise the same will not be considered during evaluation.
2. In case of any other financial mean, bidder is bound to provide the detail of any other financial mean otherwise the same will not be considered during evaluation.

Stamp & Signature of Bidder

Chief Engineer (S&S) NTDC

No: CE/S&S/NTDC/ 2/Proc/3673-3705 Dated: 17-12-2020

Chief Executive Officer,
All DISCOs.

Subject: **REVISED NTDC SPECIFICATION NO. DDS-84:2020 FOR OIL IMMERSED HERMETICALLY SEALED DISTRIBUTION TRANSFORMERS**

Enclosed please find herewith a copy of revised NTDC specification No. DDS-84:2020 for oil immersed hermetically sealed distribution transformers duly approved by the competent authority for your information and further necessary action.

17/12/20

(Engr. Muhammad Bakhsh Mahaar)
Chief Engineer (S&S) NTDC

DA/

i) Specification: 34 pages along with
   a. Annexure-A:02 pages
   b. Schedule of technical data: 04 pages
   c. Drawings: 12 pages

Cc to:-

1. Deputy Managing Director (P&E), NTDC, 419-WAPDA House Lahore
2. Deputy Managing Director (AD&M), NTDC, 413-WAPDA House Lahore
3. General Manager (D&E) NTDC, 154-WAPDA House, Lahore
4. General Manager (Technical Services) PEPCO, 721-WAPDA House Lahore
5. All members of Specification Review Committee, NTDC
6. Chief Engineer (Material Inspection) PEPCO, 2nd Building, 5th Floor, Aiwan-e-Iqbal, Egerton Road, Lahore
7. Chief Engineer (HV&SC) lab. NTDC, Rawat, Islamabad
8. PS to M.D NTDC 414-WAPDA House Lahore
9. All manufacturers/suppliers of Distribution Transformers M/S. S.S.T

- Master file.

1ST Floor, PIA Tower, Egerton Road, Lahore, Phone: +92 42 99205867 Email: ceds@ntdc.com.pk

PPRA EPADS

NTDC SPECIFICATION
DDS-84: 2020

OIL IMMERSED HERMETICALLY SEALED TYPE DISTRIBUTION TRANSFORMERS 11/0.415 kV



OFFICE OF CHIEF ENGINEER (STANDARDS & SPECIFICATIONS) NTDC,
1ST FLOOR PIA BUILDING LAHORE

PUBLIC PROCUREMENT REGULATORY AUTHORITY (PPRA) EPADS

Table of Contents

1. FOREWORD: 4
2. SCOPE: 4
3. DEFINITIONS: 4
4. SERVICE CONDITIONS: 9
5. RATING: 9
6. METHOD OF COOLING: 10
7. REGULATING TAPS: 10
8. INSULATING MATERIALS: 10
9. INSULATION LEVEL: 10
10. LIMITS OF TEMPERATURE RISE: 11
11. SHORT CIRCUIT WITHSTAND: 11
    - 11.1 General: 11
    - 11.2 Dynamic Effects Withstand Ability: 11
    - 11.3 Thermal Withstand Ability: 12
12. MARKINGS: 12
13. RATING PLATE: 14
14. PROVISION OF FITTINGS: 16
15. GENERAL REQUIREMENTS: 17
    - 15.1 Conformance: 17
    - 15.2 Tank with Top Cover: 17
    - 15.3 Bushings: 18
    - 15.4 Transformer Oil: 19
16. SPECIAL REQUIREMENTS: 20
    - 16.1 Provision of wheels 20
    - 16.2 Core Material: 20
    - 16.3 Prevention of Moisture Entry: 21
    - 16.4 Other Assembly Fittings 22
    - 16.5 Core & Winding Losses: 23
    - 16.6 Efficiency of Transformer: 24
    - 16.7 Raw Material and Stage Inspection during mass production: 24
    - 16.8 Fuse Ratings: 25
17. PROTOTYPE APPROVAL: 25
18. GENERAL REQUIREMENT OF TESTS: 26
    - 18.1 General: 26
    - 18.2 Routine Tests: 26
    - 18.3 Type Tests: 27
    - 18.4 Sample Tests: 27
    - 18.5 Sampling Procedure for Sample Tests: 28
    - 18.6 Sampling and Test Procedure for Type Tests: 28
19. ACCEPTANCE AND REJECTION CRITERIA: 31
    - 19.1 For Prototype Approval 31
    - 19.2 For Annual Type Tests during mass production: 31
    - 19.3 For Sample Tests during Mass Production 32
    - 19.4 Warranty Period Extension 33
    - 19.5 Repair Under Warranty Period: 33

20.0 SIGNATORIES 34

e-Pak Acquisition and Disposal System (EPADS) generated document | © 2026

PRINTING HISTORY

- 1st Edition as P-13:2002 .
- 2nd Edition on 5th December, 2007 with new No. DDS-84:2007.
- Amendment No.1 issued on 05 Jan. 2008.
- Amendment No.2 issued on 30 Jan. 2008.
- Amendment No.3 issued on 08 Feb. 2008.
- Amendment No.4 issued on 20 Jan. 2009.
- Amendment No. 5 issued on 03 Jun. 2010.

PUBLIC PROCUREMENT REGULATORY AUTHORITY (PPRA) EPADS

e-Pak Acquisition and Disposal System (EPADS) generated document | © 2026

SPECIFICATION NO. DDS-84:2020
FOR OIL IMMERSED HERMETICALLY SEALED TYPE
DISTRIBUTION TRANSFORMERS

1. FOREWORD:

1.1 This specification has been prepared by the office of Chief Engineer (Standards and Specifications) NTDC, Lahore for distribution transformers.

1.2 This specification is intended only for the purpose of technical specification to facilitate procurement of material and does not include provision of contract.

1.3 All amendments (1-5) in DDS-84:2007 have been incorporated in this specification and it will supersede previous specification DDS-84:2007 (amended-to-date).

1.4 This specification is subject to periodic revisions/amendments as and when occasion demands.

1.5 Reference Standards:

The transformer shall be supplied and tested in accordance with this specification and the following latest International Electro-technical Commission (IEC) Standards:

a. IEC Publication 60076, Power Transformer (Part 1-5)

b. IEC Publication 60137, Bushings

c. IEC Publication 60296 (Virgin Oil) & IEC 60422 (Used Oil) for Transformer Oil

d. IEC Publication 60060, High Voltage Test Techniques

2. SCOPE:

2.1 This specification covers the requirements of 3-phase, 11/0.415 kV, 50Hz, hermetically sealed distribution transformers, having two windings, with Class-A insulating materials, and ratings 5, 10, 15, 25, 50, 100, 200, 315, 400 and 630 kVA.

3. DEFINITIONS:

3.1 The following definitions are applicable so far as this standard is concerned.

3.1.1 Transformer:

An apparatus for transferring electric energy by means of an electromagnetic alternating field from system of given voltage to systems of desired voltage.

3.1.2 Oil Immersed Type Transformer:

A transformer having the core and winding immersed in either natural mineral oil or synthetic insulating liquid.

e-Pak Acquisition and Disposal System (EPADS) generated document | © 2026

3.1.3 Higher Voltage Winding and Lower Voltage Winding:

Terms used in reference to two winding transformers to distinguish the winding or the group of windings associated with the higher operating voltage from that associated with the lower operating voltage.

3.1.4 Primary Winding:

That winding which receives energy from the supply circuit.

3.1.5 Secondary Winding:

That winding which receives energy from the primary winding by electromagnetic induction and delivers it as output energy to the load circuit.

3.1.6 Insulation Level:

The test voltage for which the transformer is designed.

Note: For non-impulse tested transformers the insulation level is designated by the value of the separate source power frequency test voltage

3.1.7 Uniformly Insulated Winding:

A winding in which the insulation to earth at all points will withstand the separate source test voltage appropriate to the line end.

3.1.8 Graded Insulated Winding:

A winding in which the insulation to earth is graded from the amount at the line and to a smaller amount at the neutral end and which therefore will withstand separate source test voltage corresponding only to the insulation level at the neutral end.

3.1.9 Principal Tapping:

The tapping which corresponds to the rated voltage of the winding.

3.1.10 Plus Tap:

A tap so located as to introduce into the active part of the winding concerned greater number of turns than those corresponding to the principal tapping.

3.1.11 Minus Tap:

A tap so located as to introduce into the active part of the winding concerned less turns than those corresponding to the principal tapping.

e-Pak Acquisition and Disposal System (EPADS) generated document | © 2026

3.1.12 Terminals:

That part of the transformer intended to receive external connections.

3.1.13 Sub-Terminal:

A connecting point, other than a permanently jointed and insulated connection, within the casing or tank serving the purpose of effecting connection to a terminal, switch or any other auxiliary apparatus.

3.1.14 Turns Ratio:

The ratio of the number of primary turns to the number of secondary turns is taken as equal to the ratio of the rated primary voltage to the rated secondary voltage, multiplied by a phase factor depending on the method of connecting the windings in the case of poly-phase transformers.

3.1.15 Voltage Ratio:

The ratio of the voltage between line terminals of one winding to the voltage between the terminals of another winding.

3.1.16 Phase Displacement:

The angular difference between the vectors representing the voltage induced between the higher voltage and lower voltage terminals having the same marking letter and the corresponding neutral points (real or imaginary), expressed with reference to the higher-voltage side.

3.1.17 Rating:

Those quantities assigned to the transformer to define its operation under (type of duty and) conditions, specified in those recommendation and on which manufacture's guarantees and tests are based.

3.1.18 Rated Voltage of a Winding:

The voltage applicable to or to be developed at no-load between the line terminals to poly phase transformer, or between the terminals of a single phase transformer.

3.1.19 Rated Primary Voltage:

The terminal voltages applicable under normal operating conditions to the full primary winding if there are no tapping, or to the principal tapping on tapped primary winding. It is the voltage specified by the purchaser.

e-Pak Acquisition and Disposal System (EPADS) generated document 2026

3.1.20 Rated Secondary Voltage:

The voltage developed between the output terminals at no-load by the full secondary winding if there are no tapping's or in a tapped winding, by the part of the winding up-to the principal tapping when rated primary voltage is applied. It is the voltage specified by the purchaser.

3.1.21 Rated Current:

The current flowing through a line terminal of a winding, derived by dividing its rated power by its rated voltage and 1.732.

3.1.22 Rated kVA:

The product of the rated voltage in Kilovolts and rated current in Amperes and 1.732 measured on the output side.

3.1.23 Rated Frequency:

The frequency at which the transformer is designed to operate.

3.1.24 Service Conditions:

Factors outside the control of the manufacturer which may affect the operation of transformer.

3.1.25 Cooling Medium Temperature:

The temperature of the available cooling medium above which the temperatures rise is measured.

3.1.26 Class-A insulating Materials:

Organic materials such as cotton, paper having temperature limits as per NEMA insulation Class-A.

3.1.27 Thermal Time Constant:

The time which would be required for a transformer to reach a temperature rise equal to that which would be attained under steady- state specified loading conditions in a cooling medium of constant temperature, if the initial rate of temperature rise (when no heat was being dissipated) were maintained.

3.1.28 System Nominal Voltage:

The voltage by which a system is designated.

Note: The nominal voltage of apparatus is not necessarily the same as the system rated voltage.

e-Pak Acquisition and Disposal System (EPADS) generated document | © 2026

3.1.29 System Highest Voltage:

The highest r.m.s voltage between lines which occurs under normal operating conditions and at any time at any point in the system. It excludes temporary voltage variations due to fault conditions or to the sudden disconnection of large loads.

3.1.30 Impedance Voltage:

The voltage which, when applied to a winding of a transformer with other winding short-circuited, will cause rated current to flow in the winding to which the voltage is applied.

Note: The impedance voltage is the vector sum of the resistance voltage and the reactance voltage. The values for resistance, reactance, and impedance voltage apply only to the pair of winding tested.

3.1.31 Resistance Voltage:

The component of the impedance voltage in phase with the current.

3.1.32 Reactance Voltage:

The component of the impedance voltage in quadrature with the current.

3.1.33 Inherent Regulation:

The difference between rated secondary voltage and the voltage developed at the terminals of secondary winding when, with rated primary voltage applied to the terminals of the primary winding, rated current is delivered at a stated power factor.

3.1.34 OFF Load Tap Changer:

A device for changing the voltage ratio of the windings whilst the transformer is not energized on the primary side and no load being tapped on secondary side.

3.1.35 Type Test:

A test made by the manufacturer to verify a design characteristics not covered by routine tests.

3.1.36 Routine Test:

Tests conducted by the manufacturer on each transformer.

3.1.37 Year:

Financial year (1st July-30th June)

e-Pak Acquisition and Disposal System (EPADS) generated document | © 2026

3.1.38 No-Load (Iron) Loss:

The active power absorbed when a rated voltage (tapping voltage) at a rated frequency is applied to the terminals of one of the windings, the other winding or windings being open circuited.

3.1.39 Load (Copper) Loss:

The absorbed active power at a rated frequency and reference temperature associated with a pair of windings when rated current (tapping current) is flowing through the line terminals of one of the windings, and the terminals of the other winding are short circuited.

4. SERVICE CONDITIONS:

4.1 Transformer rated in accordance with this specification shall be suitable for operation under service conditions set out in clauses 4.2 & 4.3

4.2 Reference Ambient Temperatures:

The Reference Ambient Temperatures assured for the purpose of this standard are:-

i. Minimum ambient air temperature -25°C
ii. Maximum ambient air temperature 50°C.
ii. Maximum daily average ambient air temperature 40°C.
iii. Maximum yearly average ambient air temperature 30°C.

4.3 Altitude:

The height above sea-level will not exceed 1000 meters (3,300 feet).

4.4 Unusual Temperature and Altitude:

Transformer may be operated at ambient temperature and altitude higher than the specified values and in consequence its performance may be affected.

5. RATING:

5.1 The manufacturer shall describe ratings to the transformer which shall be marked on the rating plate (see Clause 13). These ratings shall be such that the transformer can deliver its rated current under steady loading conditions without exceeding the limits of temperature rise specified in Clause (10) assuming an applied voltage equal to the rated input voltage and that the supply is at 50 cycles per second at the principal tapping. The output voltage and current shall be of approximately sine-wave form.

5.2 Values of rated power for three phase transformer shall be: 5, 10, 15, 25, 50, 100, 200, 315, 400 and 630 kVA.

e-Pak Acquisition and Disposal System (EPADS) generated document © 2026

6. METHOD OF COOLING:

The method of cooling will be natural air, the method of circulation of oil will be by natural thermal head and would be indicated by symbol "ONAN".

7. REGULATING TAPS:

7.1 Unless otherwise specified by DISCOs, 5, 10 & 15 kVA transformers will have three (03) adjusting taps i.e., Normal/Principal, -2.5%, -5%, with switch positions 2, 3 and 4 respectively. For 25, 50, 100, 200, 315, 400 & 630 kVA transformers adjusting taps will be (05) i.e., +2.5%, Normal/Principal, -2.5%, -5% and -7.5% with switch positions 1,2,3,4 and 5 respectively. The tapping being located on the higher voltage winding.

7.2 Tap-changing shall be made by means of an externally operated off circuit switch (OFF Load Tap Changer) capable of being locked in position. It shall be accessible with safety.

7.3 When tapping is used to compensate for variation of voltage, the transformer shall be capable of operation at its rated kVA on any tapping without injury. The tap changing contacts shall be capable of carrying the same currents, due to external short circuits, as the windings in Clause (11).

8. INSULATING MATERIALS:

8.1 Insulating material of class-A will be used in distribution transformer. Low viscosity insulating oil conforming to latest IEC standards 60296 & IEC 60422 shall be used.

9. INSULATION LEVEL:

9.1 Test voltage shall be based on the system highest voltage of which the transformer forms a part. This value for nominal voltage of 11 kV is 12 kV.

9.2 Power frequency test voltage is 34 kV for HT side and 3 kV for LT side.

9.3 The impulse test voltage is 95 kV and the wave being 1.2/50 microseconds.

9.4 Insulation to Earth:

The insulation of windings to earth will be uniform.

9.5 Transformer for use at Higher Altitude

Where transformers are specially ordered for operation at altitude between 1000-3000 meters (3300 and 10,000 ft.) above sea level, the separate source power frequency test level shall be increased by 1.25% for each 100 meters in excess of 1,000 meters that the installation is above sea level.

e-Pak Acquisition and Disposal System (EPADS) generated document | © 2026

10. LIMITS OF TEMPERATURE RISE:

10.1 Limits of Temperature Rise for both Prototype as well as for Mass Production will be as under:

Winding -------- 50° C

Oil -------- 40° C

10.2 Altitude in Excess of 1000 Meters

When kVA rating of a transformer is required to apply at an altitude in excess of 1000 meters (3300 feet) and the limits of temperature rise are as specified above are not be exceeded at the specified altitude, the permissible limits of temperature rise, when a test is made at the manufacturers works shall be less than the specified values above by the amounts equal to 0.2°C for each 100 meters (330 feet) that the specified altitude exceeds 1000 meters (3,300 feet).

10.3 Higher Ambient Temperature:

For each degree centigrade that the average temperature of air is above 40°C, a transformer may be loaded for any period of time below its kVA rating by an amount equal to 1.5% of its capacity per °C rise in temperature above reference ambient up to a max of 10°C.

11. SHORT CIRCUIT WITHSTAND:

11.1 General:

The transformer shall be designed and constructed to withstand without damage, the effects of short circuit of magnitude equal to 25 times the symmetrical r.m.s. value of valid current for 2 seconds.

11.2 Dynamic Effects Withstand Ability:

Transformer shall be capable of withstanding the dynamic effects of short circuit of magnitude equal to 25 times the symmetrical r.m.s. value of valid current for 0.5 second duration, unless otherwise specified by purchaser in technical schedule/purchase order, combined with the asymmetrical peak value of the current in the windings which shall be taken as not greater than 2.55 ($1.8 \times \sqrt{2}$) times the over current derived. The transformer shall withstand the electromagnetic forces and mechanical stresses arising under short circuit conditions without damage on any tapping under service conditions.

Note: In case of a transformer where the value of resistance relative to that of reactance is significant, a figure lower than 2.55 may be more realistic and the factor ($k \times \sqrt{2}$) shall be calculated from measured X/R ratio as given in IEC 60076-5.

e-Pak Acquisition and Disposal System (EPADS) generated document | © 2026

11.3 Thermal Withstand Ability:

Calculations for verification of thermal ability to withstand short circuit for 2 seconds as per latest IEC 60076-5 shall be provided by the manufacturer at the time of prototype/mass production of transformer of each design.

12. MARKINGS:

12.1 Designating Letters:

Letters shall be assigned to phase windings. The same letters shall be used for all windings on each limb of the core.

The higher voltage windings shall be described by a capital (or Block) letter and the lower voltage winding of the same phase by the corresponding small letters. The letters used shall be:-

A B C for higher voltage winding and **a b c** for lower voltage windings. See Fig-1

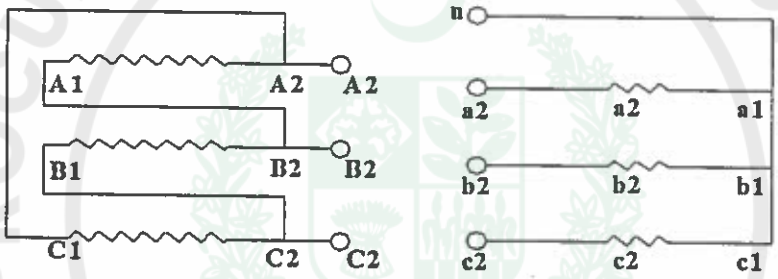

Fig. (1)

When a phase winding is divided into sections, the subscript numbers assigned to the ends and tapping of the windings shall be as per figure 2.

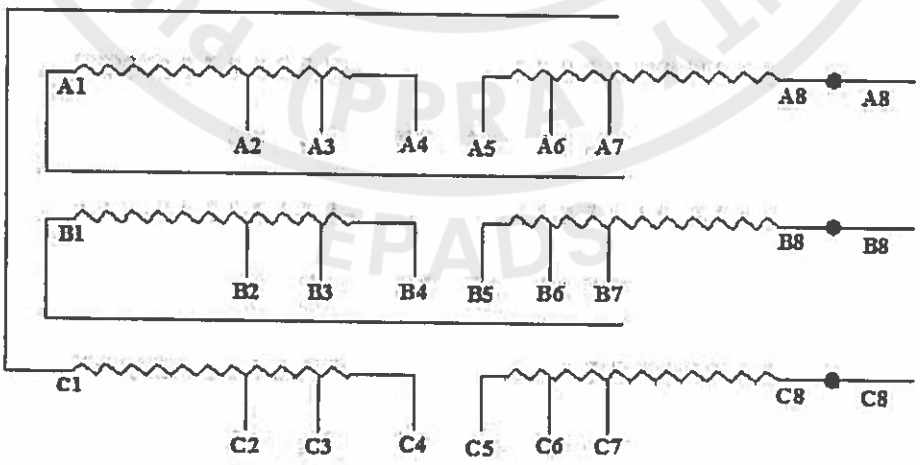

Fig. (2)

e-Pak Acquisition and Disposal System (EPADS) generated document | © 2026

Three phase windings with tappings at middle. Typical designating letters and subscript numbers for tapped windings, showing also terminal connections.

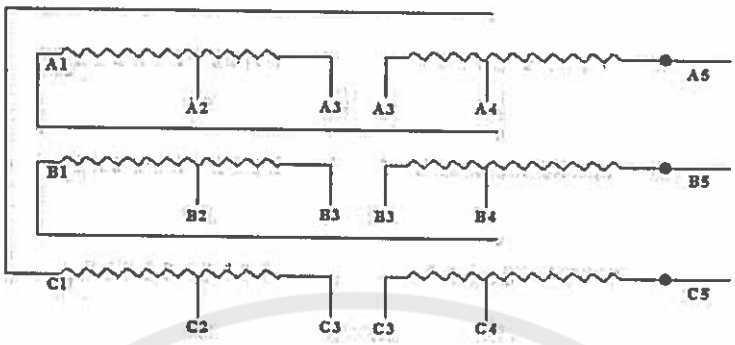

Fig. (3)

Three phase winding with tappings at middle for 5, 10 & 15 kVA transformers

12.2 **Terminal and Sub Terminal Markings for Transformers:**

The appropriate designating letters and subscript numbers assigned to the windings and tapping shall be clearly and indelibly marked upon, or adjacent to the terminals and sub terminals with which they are associated.

(a). The markings for line terminals of transformers, both letter and subscript shall be the same as those of the phase winding to which the line terminal is connected as in fig. 2. When the terminal is connected to more than one sub terminal as in the case of a delta connection, the marking selected shall be shown on the relevant diagram.

(b). Neutral terminal to be marked with letter 'n' (without a subscript number)

12.3 **Position of Terminals:**

12.3.1 **General:**

Viewed from the higher voltage side, arrangement for both sets of terminals shall be alphabetical from left to right for the phase terminals. Where a neutral terminal is fitted, it shall be on the extreme left. (See fig 4)

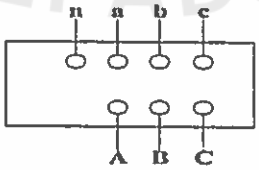

Fig. (4)

Markings and relative positions of terminals

e-Pak Acquisition and Disposal System (EPADS) generated document | © 2026

12.4 **Vector Diagrams and Symbols:**

12.4.1 Reference to vector diagrams shall apply to diagrams below. The vector group symbol being Dyn11 belonging to group with phase displacement of minus 30°.

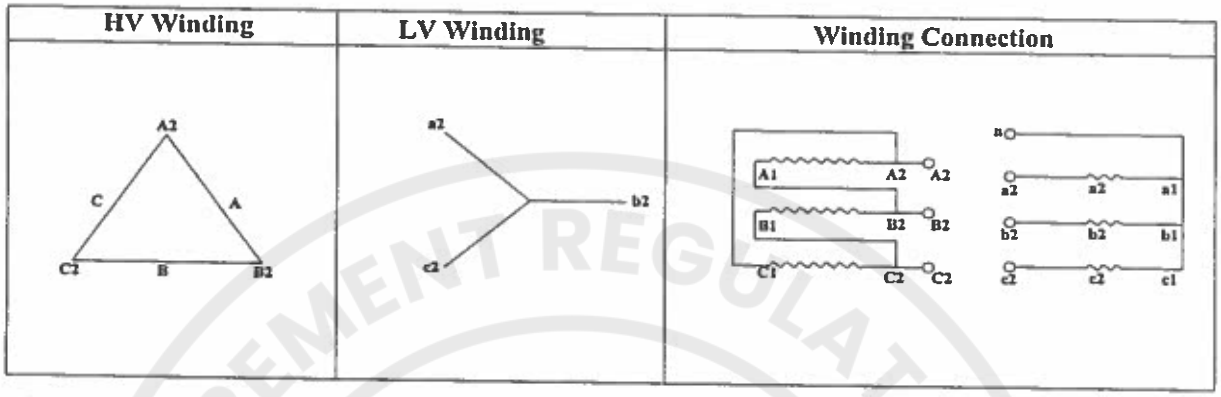

Fig. (5)

Line Terminal markings and vector diagram of Induced voltages

13. **RATING PLATE:**

13.1 (a) A rating plate shall be provided showing the relative physical position of the terminals, their markings and the approximate position of one external fitting. Plate shall show the relative position number of tap connection corresponding to the different voltages. The rating plate shall also include the manufacturer's diagram of connections.

(b) General arrangement of rating plates shall be as given below.

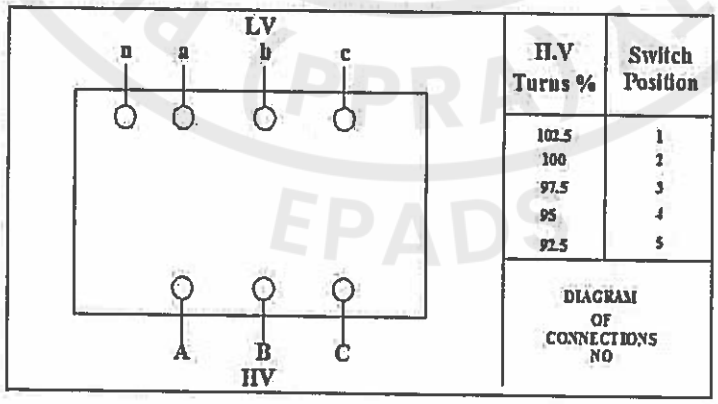

Fig. (6)

e-Pak Acquisition and Disposal System (EPADS) generated document | 2026

c) The following will be the arrangement for tap switch for 5, 10 & 15 kVA transformers.

HV Turns %	Switch Position
100	2
97.5	3
95	4

13.2 **(a) Information to be given on rating plate:**

All transformers shall be fitted with rating plate giving the information detailed in items 1 to 17 below:-

1. The number of this standard
2. Manufacturer's name
3. Manufacturer's serial number
4. Rated kVA
5. Number of Phases
6. Frequency
7. Rated voltage at no-load (higher-voltage/Lower voltage)
8. Rated current (higher voltage/lower voltage)
9. Impedance (%age)
10. Winding connections and phase displacement symbols of vector diagram
11. Connection Diagram
12. Type of cooling
13. Weight of complete transformer (kg).
14. Total weight of oil (kg).
15. Weight of core and windings assembly (kg).
16. Year of manufacturing.
17. Name of "DISCO" and purchase order number

(b) Arrangements of information:

The arrangement of the information given on the rating plate shall be as below:

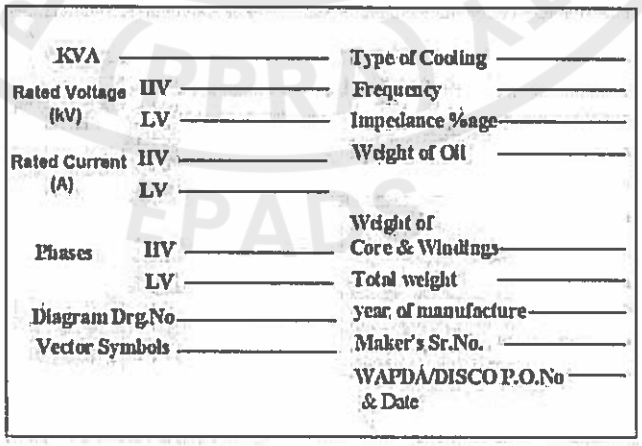

e-Pak Acquisition and Disposal System (EPADS) generated document | © 2026

(c) An M.S plate of suitable size shall be welded outside transformer body with following information engraved:

1. Name of manufacturer
2. Rating of transformer
3. Sr. No. of transformer
4. DISCO purchase order number and date
5. Year of Manufacturing

14. PROVISION OF FITTINGS:

14.1 Fittings for transformer shall be as specified below:-

	Items	Application	Drawing No.
1.	Rating Plate	All transformers	
2	P.O No. punch on base channel	All transformers	
3.	Lifting lugs	All transformers	S&S/DTF-LL1
4.	Earthing terminal for tanks	All transformers	S&S/DTF-ET2
5.	Oil filling hole and plug	All transformers	S&S/DTF-OF3
6.	Oil level indicator	All transformers	
	(i) For Sealed tank type The oil level indicator Shall show the minimum Oil level at a temperature of 30°C.	5, 10, 15, 25, 50, 100 200 & 315 kVA transformer	S&S/DTF-OL4
	(ii) For Conservator type To indicate the level at a temperature of 30° on transformer filled with conservators, two additional marking "Min." and "Max" to be provided.	400 & 630 kVA	
7.	Drain plug with sampler	400 & 630 kVA	
8.	Support lugs	5,10,15,25,50 kVA	S&S/DTF-SL5
9.	Conservator tank	400 & 630 kVA	
10.	Air vent/pressure relief Device	All transformers	
11.	Dehydrating breather	400 & 630 kVA	
12.	Oil thermometer dial type With max temperature indicator	400 & 630 kVA	
13.	Rollers	The rollers will be provided on Transformers rated 100 kVA and above on the requirement of purchaser adjusting the cost in P.O. and subsequently mentioning the requirement or otherwise in the P.O.	S&S/DTF-W6

e-Pak Acquisition and Disposal System (EPADS) generated document © 2026

15. GENERAL REQUIREMENTS:

15.1 Conformance:

The transformers shall conform to NTDC Specification No. DDS-84:2020 (amended to date) in general and shall be exactly same as designs approved by Chief Engineer Standards & Specifications (S&S).

15.1.1 All questions arising as to the acceptability or otherwise of the equipment and materials offered shall be decided by Chief Engineer (S&S) which shall be final.

15.1.2 Local manufacturers must have valid and latest ISO-9001, ISO-14001, OHSAS-18001/ISO-45001 and ISO-17025 certificates. International manufacturers must have relevant international certifications for quality, environment, occupational health and safety.

15.2 Tank with Top Cover:

5, 10, 15, 25, 50, 100, 200 and 315 kVA transformers shall be of hermetically sealed tank construction with air cushion with bolted cover and shall be suitable for outdoor pole / pad mounting installation. 400, 630 kVA transformers shall be of conservator type tank construction fitted with breather bolted cover and shall be suitable for pad mounting installation.

15.2.1 Transformer of sealed tank construction shall be effectively sealed from atmosphere for a top oil temperature range of 0°C to 110°C.

i. The completely assembled tubular tank transformer having air cushion shall be designed & tested to withstand without deformation or leakage an over pressure of 15 lbs/in^2 (PSI) for 15 minutes.

ii. The completely assembled corrugated fin type transformer with air cushion shall be designed and tested without deformation or leakage an over pressure of 30 kN/m^2 or 5 lbs/in^2 (PSI) for 15 minutes.

iii. Dry Nitrogen gas shall be used for over pressure test to avoid moisture entry.

iv. Oil level indicator with marking of min. & max. level of oil in transformer shall be located on the side wall of the transformers up to 315 kVA rating and on the conservator tank in case of 400 & 630 kVA ratings.

v. **Pressure Relief Device (PRD)/ safety valve** shall be installed on top cover of all rating transformers of tubular/corrugated tank types. The device should operate at 5 lbs/in^2 (PSI) with ±10% allowed tolerance. PRD shall conform to international standard. Make and design of PRD shall be duly approved by Chief Engineer (S&S) at the time of prototype of transformer.

e-Pak Acquisition and Disposal System (EPADS) generated document | © 2026

15.2.2 Tank Construction (Tubular/Corrugation fins):

(a) Tubular Tank:

The transformer shall be tube type tank construction with bolted cover. The sheet thickness shall be 3.0 mm (min). The top cover sheet thickness shall be 6 mm, alternatively 4 mm sheet can be used after reinforcement & creating stiffness by bending all sides. The thickness of bottom sheet shall be 4 mm (min). A metallic strip of MS sheet of appropriate size shall be provided round the tubes of the tank for extra protection of all the transformers except for 5, 10 & 15 kVA.

(b) Corrugated Fin Tank:

The transformer shall be corrugated fin type tank construction with bolted cover. The frame (upper & lower) sheet thickness shall be 3.0 mm (min). The fin sheet thickness shall be 1.2 mm with mill variation. The top cover shall be the same as described in "tubular tank" clause 15.2.2(a). An M.S rod of 6mm (min) dia shall be provided on the upper & lower corners of the each fin panel for making it straight & aligned.

15.2.3 Bird Protection:

To prevent flashover caused by large birds, transformer's cover shall be effectively coated with a weather proof permanent insulating material / powder coating having a dry dielectric withstand voltage of not less than 8 kV to withstand 8 kV dielectric test. (Appendix A)

15.2.4 Tank Finish:

The tank finish shall be a Battle-ship grey color. The paint shall be highly resistant to the effects of strong sunlight and high temperature and shall have a long life under such conditions. Before paint, prepare the surface of tubular tank/corrugated tank by Shot Blasting. The thickness of paint-coating shall not be less than 0.12 mm.

15.3 Bushings:

LT and HT Bushings will be used from manufacturers which have valid prototype approval from the office of Chief Engineer (S&S). Bushings and connectors shall be provided on transformers as indicated below:

Transformer's Rating	Drawing No.
LT Bushings 5, 10, 15, 25, 50, 100 kVA	S&S/DTF-LTB200
LT Bushing 200 kVA	S&S/DTF-LTB600/1
LT Bushing 315, 400 kVA	S&S/DTF-LTB1000
LT Bushing 630 kVA	S&S/DTF-LTB2000
HT Bushings all ratings	S&S/DTF-HTB1 & S&S/DTF-HT2

e-Pak Acquisition and Disposal System (EPADS) generated document | © 2026

15.4 Transformer Oil:

a) The oil used in the transformers shall conform to latest IEC-60296 & IEC 60422, Class-1 Oil.

b) To avoid formations of bubbles and entry of moisture to ensure longer service life, it is essentially required to fill transformer oil under vacuum.

c) The manufacturer shall provide testing facilities at their labs. for following routine oil tests which shall be carried out as per IEC 60422:

a) Specific gravity of the oil
b) Viscosity
c) Flash point
d) Acidity value
e) Dielectric Strength of the oil
f) Pour Point

d) Oil type testing will be performed at HV & SC Lab. NTDC, Rawat or at an independent ILAC/PNAC accredited lab. or any equivalent accredited labs. approved by Chief Engineer (S&S) as per latest IEC-60296 / IEC 60422 at the expense of the firm. Below mentioned non-exclusive Type tests will be carried out:

Sr. No.	Tests to be performed on oil samples taken from Oil Drums/ Tanks (Virgin Oil)	
1	Viscosity at 40°C	
2	Viscosity at -20°C	
3	Pour Point	
4	Potentially Corrosive Sulphur	
5	Inhibitor Content (for uninhibited oil)	
6	Oxidation Stability	Total Acidity
		Sludge
		DDF at 90°C
7	Flash Point	
8	Density at 20°C	
9	PCA Content	
10	2-Furfural & related compounds	

Sr. No.	Tests to be performed on oil samples taken from Transformer Tank
1	Appearance
2	Color
3	Breakdown Voltage (kV/ 2.5mm gap)
4	Water Contents (mg/kg)
5	Acidity (mg KOH/ g)
6	Dielectric Dissipation Factor (DDF) (40 Hz to 60 Hz at 90°C)
7	Resistivity 90°C (GΩm)
8	Interfacial Tension (mN/ m)
9	Total PCBs Content(mg/ kg)
10	Corrosive Sulphur

e) All the necessary documents for the purchase of oil should also be submitted to S&S and MI Departments at the time of prototype and mass production respectively.

15.5 The kVA rating of the transformers up to 630 kVA shall be stenciled in white on both sides of the transformers in 4 inches bold letters.

Encls:

Lifting Lug Drawing No. S&S/DTF-LL1

e-Pak Acquisition and Disposal System (EPADS) generated document | © 2026

Filling Plug & Collar	Drawing No. S&S/DTF-OF3
Support Lug for 5,10,15,25 & 50kVA Distribution Transformer	Drawing No. S&S/DTF-SL5
Mounting Arrangement for Distribution transformers	Drawing No. S&S/DTF-MA7

16. SPECIAL REQUIREMENTS:

16.1 Provision of wheels

The transformer of ratings up to 50 kVA will be supplied without wheels and above 50 kVA rating transformers shall be supplied with wheels subject to the conditions mentioned in clause 14.1 (13).

16.2 Core Material:

a. Transformer core shall be made of high grade non-ageing prime CRGO (Cold rolled grain oriented) Electrical Steel Sheet.

b. CRGO electrical steel sheet thickness shall not be more than 0.27 mm with maximum permissible watt loss value of 1.1 Watts/kg at 1.7 Tesla and 50Hz.

c. CRGO core material shall be from **Europe, U.K, U.S.A, Japan, South Korea and Russia manufacturing firms.** The core manufacturing firm and importer both shall certify that they are not blacklisted anywhere in the world. New aspiring CRGO core manufacturing firms will have to obtain qualification/approval letter from Chief Engineer (S&S) for use of their core in transformer manufacturing for the first time after fulfilling the following criteria:

(i) CRGO manufacturer must possess at least Fifteen (15) years manufacturing experience of CRGO Electrical steel sheet.

(ii) CRGO manufacturer must have state-of-the-art in-house manufacturing process including Blast furnace as per relevant latest international standards.

(iii) CRGO manufacturer must provide sufficient documents regarding export of CRGO material to other countries.

(iv) The testing lab at premises of CRGO manufacturer shall have the equipments duly calibrated from ILAC or equivalent international standardizing body to carry out below mentioned non-exclusive core tests as per relevant international standards IEC/ASTM etc.:

1. Magnetic Properties
2. Surface Insulation Resistivity
3. Stacking Factor
4. Mechanical Properties
5. Ageing Test of Insulation Coating

e-Pak Acquisition and Disposal System (EPADS) generated document | © 2026

(v) CRGO core manufacturers will provide the required certified documents regarding above mentioned criteria from Sr. No (i) to Sr. No (iv).

(vi) Tests mentioned at Sr. No. (iv) will be carried out at independent international ILAC/APAC accredited lab. or any equivalent accredited International labs. approved by Chief Engineer (S&S) which shall also be duly witnessed by representative(s) of the office of Chief Engineer (S&S).

d. All requisite documents shall be provided by CRGO manufacturers/importer. Any CRGO manufacturing firm premises may also be visited by the representative(s) of the office of Chief Engineer (S&S) at the cost of CRGO manufacturer in order to verify the manufacturing and testing facilities.

e. All the expenses like testing fee, expenditure incurred for shipment of CRGO core material from manufacturer's premises to the testing lab., travelling, boarding lodging and daily allowance of representative(s) of the office of Chief Engineer (S&S) shall be borne by the manufacturer/ importer.

16.3 Prevention of Moisture Entry:

The manufacture must design their transformer to prevent the Moisture Entry as follows:

a) Gasket

i. NBR (Nitrile butadiene rubber) rubber seal (double) with a metal seat on the spindle of tap changer driving rod to hold the NBR rubber must be provided. NBR must conform to ASTM F-104 (amended to date) with the following properties:

a) Change in mass (+15%, -5%)
b) Hardness (60 – 90 Shore A)
c) Compressibility (25% - 35%)

ii. NBR Gasket /NBR rubberized cork sheet conforming to latest ASTM F-104 be provided under the cover plate of the transformer and HT & LT bushings. A certificate from the Gasket manufacturer for authenticity of quality of NBR shall be provided for each lot of the offered transformers for International Tenders and for each local purchase order of DISCOs.

b) Nuts & Bolts:

i. High Tensile Galvanized Steel Bolts conforming to WAPDA Specification DDS-10 (Amended to-date) be provided for the transformer cover plates.

ii. All Nuts and Bolts used for the Tank Assembly shall be hot dipped galvanize according to P-82 having the weight of zinc coating as under:-

Individual	305 gram/m^2
Average (3 Samples)	380 gram/m^2

e-Pak Acquisition and Disposal System (EPADS) generated document | © 2026

c) Araldite/Epoxy applied on portion of screws of upper arcing horn before tightening

d) Electro Galvanizing of Steel Parts

On both ends of the Tie Rods, Hanging Studs & Core Bolts, Lock Nuts with spring/lock washers are to be used. All threads of Tie Rods, Hanging Studs & Core Bolts be punched after proper tightening. All steel washers, nuts, tie rods shall be electro-galvanized.

e) Check nut should be used on HT through-bolt under the HT connectors.

f) The top end of HT Bushing shall be filled with Araldite 2 to 3 inches after fitting of Through-bolts so that moisture/water should not enter from the outside. A space of 50 to 75 mm of the insulation tube at the bottom may be kept empty. Alternatively long bushings may be used.

g) Industrial sealant shall be applied on the side wall oil gauge in case of non-rubber gaskets.

h) The holes of HT/LT bushings on the top cover sheet should be pressed upward.

16.4 Other Assembly Fittings

a) HT/LT Connectors:

HT/LT connectors shall be tested during stage inspection according to WAPDA specification P-72 (amended to date). The material of HT/LT connectors shall be of brass with minimum tin coating of 30 microns conforming to BS 1872:84. Nut of LT connector should be oriented outward for the safety of Lineman.

b) Special connectors with two outputs on LT side of 200 kVA transformers which shall accommodate 2 Nos. 120 mm sq. conductor or equivalent size cable must be provided. The drawing No. S&S/DTF-LTB600/2 (with two outputs on LT side) may be followed instead of single output drawing.

c) Locking Arrangements:

Locking arrangements be provided to HT & LT connectors by welding / press fitting of metallic washer of brass at end of bolt.

d) Insulating Material:

Pressboard, pressure blocks, winding coil drums, oil duct strips and separator shall be used either made of press board or laminated Wood/Bakelite Blocks conforming to International Standards.

e-Pak Acquisition and Disposal System (EPADS) generated document | © 2026

e) **Conductor Risers:**

Flexible conductor risers connecting LT windings to transformer terminals must be electrical grade.

f) **Earthing Terminal:**

The dia of hole for earthing terminal shall be 12 mm.

g) **Sealing of Oil Filling Plug and PRD:**

The arrangement of sealing of oil filling plug and PRD shall be provided.

h) **Sealing Arrangement of Transformer:**

Two through-hole bolts shall be provided on the adjacent sides of the top cover to seal the transformer.

i) **Hanging Rods:**

The lifting rods, yoke clamping bolts and tie rods shall be of appropriate size to sustain forces during short circuit.

j) **Inner/ Outer Rods:**

Inner/ outer tie rods of core-coil assemblies shall be at least 12mm up to 100 kVA, 16mm for 200, 315 kVA and 20 mm for 400 & 630 kVA transformers.

16.5 Core & Winding Losses:

Maximum allowable losses at rated voltage and rated frequency corrected at 75° C for 11/0.415 kV Distribution Transformers are given in the table below:

kVA Rating	5	10	15	25	50	100	200	315	400	630
Iron Losses (Watts)	44	52	68	98	140	248	396	604	740	1080
Copper Losses (Watts)	140	256	348	512	936	1616	2728	3760	4480	6520

16.5.1 Capitalization (Evaluation):

The above losses are maximum allowable and there would be no positive tolerance. Bids with higher losses than the above specified values would be treated as non-responsive. However, the manufacturer can offer losses less than above specified values. The purchaser will evaluate offers with losses lower than the maximum allowable losses on Total Owning Cost (TOC) basis in accordance with the formula given below:

TOC = Quoted price + (K1 x Iron Losses) + (K2 x Copper Losses)

e-Pak Acquisition and Disposal System (EPADS) generated document | © 2026

Where:

Iron Losses (K1): Rs.2, 99,948 per kW

Copper Losses (K2): Rs.145,299 per kW

1. No tolerance is allowed on the guaranteed losses declared by the manufacturer in the bid for both, prototype and mass production.

2. A penalty at four times the rate of the capitalized cost of no load and load losses indicated above shall be payable by the supplier for the losses in excess of the guaranteed values up to 10% for acceptance of lot. For losses exceeding by 10%, the offered lot will be rejected.

3. Manufacturers will be required to offer new prototype sample of transformer for approval for each of the rating/design with any change/improvement in design of the transformers.

16.6 Efficiency of Transformer:

(i) Where a statement of the efficiency of transformer is required, the following losses are included:

(1) No load loss, which is considered to be constant at all loads.
(2) Load loss, which varies with load.

The total loss 'on load' is the sum of 1 and 2. The efficiency to be declared is given by the following expression for rated kVA and unity power factor.

$$\text{Efficiency} = \frac{Output\ in\ KW}{Output + Losses} \times 100$$

(ii) The measured no-load current must not exceed +30 % of the design/guaranteed value.

16.7 Raw Material and Stage Inspection during mass production:

i. For tin coating and other raw material tests, the sampling and testing shall be carried out by Chief Engineer (M.I) once for local DISCOs purchase order/International Tender.

ii. Stage inspection including HT & LT Bushing, CRGO core (thickness, Watt Loss/kg), NBR and Connectors etc. will be carried out by Chief Engineer (M.I) during stage inspection.

iii. The methodology and sampling criteria for raw material and stage inspection shall be laid down by Chief Engineer (M.I).

e-Pak Acquisition and Disposal System (EPADS) generated document | © 2026

16.8 **Fuse Ratings:**

Fuse rating shall be printed on the tank of the transformer in white colour as given below.

USE.....K (Color Code)

Fuse at 11 kV Side

The value of the fuse rating and colour codes for different kVA capacities shall be selected from the table given below:

Designation	Current Rating (Amp).	Transformer Rating (kVA)	Color Code
01 K	01	5, 10 & 15	Black
03 K	03	25 & 50	Green
10 K	10	100	Blue
15 K	15	200	Orange
30 K	30	315 & 400	White
40 K	40	630	Grey

The size of the letters shall be appropriate to be visible from ground.

17. PROTOTYPE APPROVAL:

17.1 If the manufacturer does not possess the prototype approval of the new design and rating from Chief Engineer (S&S), according to the prevalent NTDC Specification, the same shall have to be obtained before start of mass production.

17.2 The manufacturer may request for new prototype before the expiry date on the basis of some improvements.

17.3 It is mandatory to supply details pertaining to design, short circuit performance, temperature rise of oil and winding, tank details (No. of tubes/Fins), detail of CRGO core material used and its manufacturer, weight of complete transformer, weight of oil, weight of core, weight of windings, etc. to Standards and Specifications Department at the time of prototype approval along with set of drawings.

17.4 The prototype approval shall be valid for a period of One (01) year for the first time for each rating. Manufacturer will submit Performance Certificate from end user after one year to Chief Engineer (S&S). Onward Prototype approval will be valid for Three (03) years.

17.5 Local manufacturer shall be pre-qualified from the respective DISCO and shall possess educational purchase order from any DISCO when applying for prototype approval for the first time.

17.6 In case of foreign manufacturers, the transformer of each design of each rating will be subjected to all routine, type and sample tests as per clause 18 of General Requirements of Tests at manufacturer's Lab. in case of having requisite testing

e-Pak Acquisition and Disposal System (EPADS) generated document | © 2026

facilities except short circuit test which will be conducted at an independent international ILAC/APAC accredited lab. or any equivalent accredited International labs. approved by Chief Engineer (S&S). All the expenses like testing fee, expenditure incurred for shipment of transformer from manufacturer's premises to the testing lab., travelling, boarding lodging and daily allowance of two Engineers shall be borne by the manufacturer.

18. GENERAL REQUIREMENT OF TESTS:

18.1 General:

18.1.1 The tests shall be carried out as per DDS-84:2020 (Amended to date) and latest international standards as mentioned in clause 1.5.

18.1.2 All routine, type and sample tests will be conducted at the manufacture's works having requisite testing facilities except short circuit test which will be conducted at HV & SC Lab. NTDC, Rawat or at an independent ILAC/PNAC accredited lab. or any equivalent accredited labs. approved by Chief Engineer (S&S). The prototype sample transformer will qualify only if it passes all routine, type and sample tests otherwise the manufacturer will redesign the transformer and reoffer it again for prototype approval.

18.1.3 Pad and pole mounted transformers of same rating will be considered separate design as per their prototype approval and shall be tested separately including annual type tests.

18.1.4 Transformer with losses lower than the specified losses for each rating in clause 16.5 will be considered as separate design during prototype and mass production and shall be tested separately including annual type tests.

18.1.5 All testing equipment should be calibrated annually from ILAC/APAC/PNAC accredited lab. or any equivalent accredited labs. approved by Chief Engineer (S&S) and the manufacturer shall have valid calibration certificates.

18.1.6 The design tests will be carried out by putting all the measuring meters at the transformers terminals.

18.1.7 The enameled wire test will be performed during prototype testing as per IEC 60317 with break down value not less than 4.0 kV.

18.2 Routine Tests:

Following routine tests shall be carried out on each and every transformer by the manufacturer at his premises and a record in this regard shall be maintained which will be produced to the Inspector on demand.

i. Measurement of winding resistance.

ii. Measurement of voltage ratio (turns ratio) and vector group.

e-Pak Acquisition and Disposal System (EPADS) generated document | © 2026

iii. Measurement of Core losses.
iv. Measurement of Winding losses and impedance voltage.
v. Dielectric Tests.
   a) Induced over-voltage withstand test.
   b) Power frequency voltage withstand tests.
vi. Bird protection test (8 kV)
vii. Pressure Relief Device Operation (at 5 PSI)
viii. Oil Routine test (15.4 (c))

18.3 Type Tests:

18.3.1 Following type tests shall be carried out during prototype testing and during mass production in a financial year as per relevant clause.

i. Oil Type Testing (clause 18.6.1)
ii. Temperature Rise Test (Clause 18.6.2)
iii. Impulse Voltage Withstand Test (Clause 18.6.3)
iv. Short Circuit Test (Clause 18.6.4)

18.4 Sample Tests:

The following sample tests shall be conducted by NTDC/PEPCO Inspector on the selected sample transformers from mass production.

i. Measurement of no load losses (100% lot quantity)
ii. Measurement of load losses and impedance voltage (100% lot quantity)
iii. Measurement of winding resistance
iv. Measurement of voltage ratio (turn ratio) and vector group
v. Dielectric Tests
   a. Induced voltage withstand test
   b. Power frequency voltage withstand tests
vi. Paint thickness (Clause 15.2.4)
vii. Bird protection test at 8 kV.
viii. Tank pressure test (Clause 15.2.1)
ix. Pressure Relief Device Operation (5 PSI)
x. Oil routine test (15.4 (c))
xi. Visual and dimensions tests:-
   a. Overall dimensions of the tank and all extended fittings
   b. Core assembly
   c. Weight of HT, LT winding, core, oil and tank etc.

e-Pak Acquisition and Disposal System (EPADS) generated document | © 2026

18.5 Sampling Procedure for Sample Tests:

18.5.1 For Sample tests from Sr. No. (i) to (ii):

These tests shall be performed on the 100% offered quantity.

18.5.2 For Sample tests from Sr. No. (iii) to (ix):

a. If the offered lot is 5 or below then all the transformers shall be tested.

b. If the offered lot is between 6 to 10 then 5 Nos. transformers shall be sample tested.

c. If the offered lot is between 11 to 50 then 5+20% of the offered lot shall be sample tested.

d. If the offered lot is between 51 to 100 then 10+10% of the offered lot shall be sample tested.

e. If the offered lot is above 100 then 15+10% of the offered lot shall be sample tested.

18.5.3 Oil sample test shall be carried out as per clause 15.4 (c). The samples shall be taken from 5% quantity of offered lot. The sampling of oil shall be done from the transformer's tanks.

18.5.4 Visual and dimensional test at Sr. No (xi) shall be carried out on at least two nos. transformers of each design of each rating type offered in a lot for international Tenders. Two (02) No. transformers of for Lot of International Tenders will be selected and opened from the offered transformers by inspectors, one transformer in the beginning and other at any stage and internal details will be compared with approved drawings.

For local purchase orders of DISCOs One (01) No. transformer of each design of each rating will be selected in each purchase order for dimensional checks.

18.6 Sampling and Test Procedure for Type Tests:

18.6.1 Oil type Test:

(i) The oil shall conform to latest IEC-60296 & IEC 60422 class-I oil.

(ii) For mass production of local manufacturers type test for oil shall be carried out as per clause 15.4(d) TWICE in a financial year i.e. once in each half from any lot/inspection call of each rating which shall be valid for all DISCOs/Private purchase orders of all designs i.e., low loss/Pad-mounted transformers of same rating. ICs shall be issued only after receiving the successful results.

e-Pak Acquisition and Disposal System (EPADS) generated document | © 2026

(iii) For mass production of foreign manufacturers oil type test will be carried out on each rating of transformers once in each lot.

18.6.2 Temperature Rise Test:

(i) The Temperature Rise Test shall be carried out by feeding declared guaranteed losses at principal tap. However, if total measured losses at any other tap are higher than guaranteed losses at principal tap then temperature rise test will be performed at that tap by feeding the higher losses. The oil temperature will be measured directly for 5, 10, 15, 25, 50, 100, 200 & 315 kVA transformers and in thermometer pocket of copper sheet having thickness of 0.8mm for 400 and 630 kVA transformers. The following prerequisite tests will also be carried out.

a) Measurement of winding resistance.
b) Measurement of no load and load losses.

(ii) For mass production of local manufacturers the temperature rise test of each design of each rating on one number transformer will be carried out jointly TWICE in a financial year i.e. once in each half from any lot/inspection call by the offices of C.E (M.I) and C.E (S&S) once against DISCOs purchase order. One test for each design of each rating will be valid for all DISCOs purchase orders for the above period. Temperature rise for private purchase orders will be carried out on randomly selected one no. of transformer for every 30 no. transformers by the office of C.E(M.I).

(iii) For mass production of foreign manufacturers the temperature rise test will be carried out on each design of each rating on one number transformer once in each lot.

18.6.3 Impulse Voltage withstand Test:

(i) The impulse voltage withstand test shall be performed as per latest IEC 60076-3 and clause 9.3 on each phase of the transformer with following sequence and conditions:

Step 01	Reference Wave (60 kV)
Step 02	Full wave (95 kV)
Step 03 & 04	Two Nos. Chopped waves (110 kV)
Step 05	Two No. Full wave (95 kV)

The test voltage shall be of negative polarity.

(ii) For mass production of local manufacturers the impulse test of each design of each rating on one number transformer will be carried out jointly TWICE in a financial year i.e. once in each half from any lot/inspection call by the office of C.E (M.I) and C.E (S&S) against DISCOs/ Private purchase orders. One test for each design of each rating will be valid for all DISCOs/ Private purchase orders for the above period.

e-Pak Acquisition and Disposal System (EPADS) generated document | © 2026

(iii) For mass production of foreign manufacturers, the impulse test will be carried out on each design of each rating on one number transformer once in each lot.

18.6.4 Short Circuit Test:

(i) Short circuit tests are not included as a standard requirement. To verify the ability of the transformer to withstand the short circuit conditions, the transformer shall be subjected to dynamic short circuit withstand test as per clause 11.2 at HV & SC Lab. NTDC, Rawat or at ILAC/PNAC accredited lab. or from any equivalent accredited lab. duly approved by Chief Engineer (S&S). Transformer shall be tested as per below mentioned testing sequence. It will qualify only when it passes all these tests:

a. Measurement of winding resistance
b. Measurement of voltage ratio and vector group relationship
c. Measurement of no load and load losses
d. Power frequency voltage withstand tests
e. Induced over voltage withstand test.
f. Short Circuit test
g. Measurements of winding resistance
h. Measurements of voltage ratio and vector relationship
i. Measurements of no load and load losses
j. Power frequency voltage withstand tests.
k. Induced voltage withstand test
l. Detanking and physical inspection of transformer assembly for any visual deterioration if any.

(ii) For mass production of local manufacturers the short circuit test shall be carried out on one number transformer of each design of each rating against any DISCO/private purchase order once in a financial year from any lot/inspection call and shall be acceptable to other DISCOs/private purchase orders.

(iii) For mass production of foreign manufacturers one transformer of each design of each rating for each shipment / lot against the tender / contract shall be tested for short circuit withstand capability at HV & SC Lab. NTDC, Rawat or at ILAC/PNAC accredited lab. or from any equivalent accredited lab. duly approved by Chief Engineer (S&S) in addition to in-house testing during inspection. Acceptance certificate will be issued by the purchaser after satisfactory testing.

(iv) For DISCO's purchase order/Private purchase, the transformer sent to the lab. for short circuit testing shall be picked randomly and sealed jointly at any stage from any production / lot by the representatives of C.E (M.I) and C.E

e-Pak Acquisition and Disposal System (EPADS) generated document | © 2026

(S&S) and will be witnessed by the said offices. All expenses like testing fee, expenditure for shipment of transformer from manufacturer's premises to the testing lab., travelling, boarding lodging and daily allowance of two NTDC/PEPCO Inspectors will be borne by the manufacturer.

19. ACCEPTANCE AND REJECTION CRITERIA:

19.1 For Prototype Approval

The prototype transformer will be approved for mass production only when it passes all the routine, type and sample tests. If the transformer fails in any of the tests, the transformer shall be re-designed by the manufacturer and shall offer the same for repeating all the tests.

19.2 For Annual Type Tests during mass production:

The following criteria will be applied during mass production for annual type tests:

19.2.1 Oil Type Test

If the oil fails in any type test, then complete lot shall be rejected. Thereafter, oil samples will be retaken from the next offered lot of same rating and shall be subject to type test again.

19.2.2 Temperature Rise and Impulse Tests

i. In case the selected transformer fails in testing, then two more samples of the same rating and design shall be selected randomly from the same lot and shall be subjected to the test. If any one of the sample fails again the COMPLETE lot shall be rejected and ongoing inspection and supply of failed rating and design of transformers will be stopped temporarily. The failed transformer will be opened jointly by the representatives of Chief Engineer (MI) and Chief Engineer (S&S) and cause of failure intimated by the manufacturer will be got checked/verified. After rectifying the fault in all the offered transformers, the manufacturer will submit a certificate to the above effect. Thereafter, the manufacturer will re-offer the improved version of previously offered lot with same serial numbers. One (01) No. transformer will be again jointly sealed and got tested at HV & SC testing Laboratory, NTDC, Rawat, Islamabad, on the expense of the manufacturer. If selected transformer qualifies the test, the inspection of offered lot will resume.

   Henceforth, manufacturer will ensure future mass production as per improved version of transformers.

ii. If the transformer fails again then the offered lot shall be rejected and the prototype of subject transformer rating and design will be cancelled.

e-Pak Acquisition and Disposal System (EPADS) generated document | © 2026

Manufacturer will have to obtain fresh prototype after making improvements in transformer design and thereafter will start mass production accordingly as per new prototype approval.

19.2.3 Short Circuit Test

i. In case the transformer sent to testing lab. fails, offered lot will be rejected and ongoing inspection and supply of failed rating and design of transformers will be stopped temporarily until the cause is identified in the submitted joint report by representatives of the office of Chief Engineer (S&S) and Chief Engineer (M.I). The stage inspection of these transformers will be completed by office of Chief Engineer (MI) keeping in view the nature of fault. Thereafter, the manufacturer will re-offer the improved version of previously offered lot with the same serial numbers, out of which One (01) No. transformer will again be jointly sealed for short circuit test by the representative of Chief Engineer (S&S) and Chief Engineer (M.I). If selected transformer qualifies the test, the inspection of offered lot will resume.

   Henceforth, manufacturer will ensure future mass production as per improved version of transformers.

ii. If second transformer selected for short circuit test as above fails again, the offered lot shall be rejected and the prototype of subject transformer rating and design will be cancelled. Manufacturer will have to obtain fresh prototype after making improvements in its transformer design and thereafter will start mass production accordingly as per new prototype approval.

19.3 For Sample Tests during Mass Production

The following criteria will be applied during mass production for Sample tests:

a. Power Frequency and Induced Voltage withstand Tests

   i. If all the sample transformers pass then the lot shall be accepted.
   ii. If one number transformer fails then re-sampling be done from the remaining lot. If all the sample pass the test, the lot shall be accepted, however, the transformer which failed in the first sampling shall be rejected.
   iii. If any of the transformers fails in the second sampling then complete lot shall be rejected.

b. If the oil fails in any routine tests, then two more samples will be taken from the offered lot and tested. If any of the samples fails, then the lot will be rejected.

c. Remaining Sample Tests

   i. If one number transformer fails, the lot shall be accepted.

e-Pak Acquisition and Disposal System (EPADS) generated document | © 2026

ii. If two transformers fails, then re-sampling shall be done from the remaining lot, if any one of the transformer fails then the complete lot shall be rejected.

iii. If three Nos. sample fail then complete lot shall be rejected.

iv. Following criteria will be applicable while measurement of losses (iron and copper):

(1) If the individual losses of all the sample transformers are equal or below the guaranteed losses, the complete lot shall be accepted.

(2) If individual losses of one sample transformer exceed the limits by more than 10% of guaranteed losses, complete lot shall be rejected.

(3) If individual losses (Iron and Copper) of one sample transformer are higher than the guaranteed losses by not more than 10%, then a penalty at four time the rate of K1 and K2 (whichever is applicable) shall be charged on the complete lot.

19.4 Warranty Period Extension

i. In case of rejection of lot due to failure in temperature rise, impulse test and short circuit tests as mentioned in clause 19.2.2 (i) and 19.2.3 (i) respectively, the WARRANTY PERIOD of the subsequent and already supplied transformers during validity period of tests, for the failed rating and design against all purchase orders / contracts shall be DOUBLED from the date of receipt of transformers at consignee's store against period specified in clause "WARRANTY" of the tender / purchase order. The extended warranty shall be printed by the manufacture on all subsequent transformers. The Sr. no of all the transformers already delivered to stores on which DOUBLE warranty following the "WARRANTY" clause of the purchase order is subsequently applicable would be intimated to all the field stores by the purchaser.

ii. In case of cancellation of the prototype as mentioned in clause 19.2.2 (ii) and 19.2.3 (ii), the WARRANTY PERIOD of already supplied transformers will be DOUBLED as mentioned above and subsequent transformers to be supplied as per new prototype will have regular WARRANTY as mentioned in Purchase Order.

19.5 Repair Under Warranty Period:

i. The damaged transformers under warranty period will be repaired by the manufacturers free of cost within four months of receipt irrespective of the condition that it is damaged due to DISCO fault or manufacturer fault. The transportation / handling charges etc. will be to DISCO's account.

ii. For the acceptance of these repaired transformers under warranty period, all the routine tests shall be carried out for conforming the suitability of further use.

e-Pak Acquisition and Disposal System (EPADS) generated document | 2026

iii. The damaged transformers under WARRANTY PERIOD (DOUBLED) as per clause 19.4 (ii) will be replaced free of cost with newly improved design (fresh prototype approval). No repair of transformers in this case will be accepted.

20.0 SIGNATORIES

Prepared By:

Engr. Muhammad Hanan Azam Assistant Manager (D&S)	**Engr. Mubeen Asghar** Deputy Manager (DE)	**Engr. Amjad Ali** Addl. Chief Engineer (D&S)

Checked By:

Engr. Lubna Kausar Addl. Chief Engineer (DP)	**Engr. M. Afzal Mughal** Addl. Chief Engineer (DE)

Approved By:

Engr. M. Bakhsh Mahaar Chief Engineer (S&S)NTDC **(Secretary SRC)**	**Engr. Taqiud Din** Chief Engineer (P&C) NTDC **(Member SRC)**	**Engr. Farooq Rashid** Chief Engineer (C&M) NTDC **(Member SRC)**
Engr. Javed Mahmood GM (Asset Management) North, NTDC **(Member SRC)**	**Engr. Tahir Mahmood** GM (Design & Engineering) NTDC **(Convener SRC)**	

e-Pak Acquisition and Disposal System (EPADS) generated document | © 2026

ANNEXURE-A

(02 Pages)

PUBLIC PROCUREMENT REGULATORY AUTHORITY (PPRA) EPADS

APPENDIX--- A

TECHNICAL INSTRUCTIONS FOR THE POWDER COATING PROCESS AND SPECIFIED TESTS ON TOP COVER PLATES OF DISTRIBUTION TRANSFORMERS FOR BIRD PROTECTION

1. SCOPE

These technical instructions cover the requirement of the bird protection through powder coating on top cover plates of three phase, 11/0.415 kV all rating Distribution Transformers.

2. MATERIAL OF POWDER COATING

Powder should be pure Polyester or Polyester Epoxy. The raw material of powder should be of European Origin such as Belgium or England.

3. APPLICATION OF POWDER COATING

Reference: Technical Brief #11, Powder Coating Institute, USA.

Powder coatings should be applied by Electrostatic Spraying using classic devices. Which can provide a negative tension of 60-90 kV.

Following sequence of surface treatment and curing should be followed:

Step One	De-Rusting: (Acid cleaning or shot blasting) followed by water rinse to remove completely rust and oxides from the top cover plate.
Step Two.	Degreasing followed by water rinse to prepare the plate surface free from oil or grease.
Step Three	Zinc or Iron Phosphating in a hot bath followed by water rinse to prevent the surface from rusting and to make proper paint adhesion.
Step Four	Powder application by the Electrostatic Spraying using classic devices which can provide a negative tension of 60-90 kV.
Step Five	Curing in an oven at 180-200°C for 20 minutes.

4. TESTS AND TEST SAMPLES(Powder Coating /Araldite)

ROUTINE TESTS

Tile following routine test will be performed on each and every Distribution Transformer Top Cover Plate as per inspection criteria.

i. Dielectric Test

The test should be performed in accordance with clause 15.2.3 of NTDC specification DDS-84-2020 (amended to date) to withstand a dry dielectric voltage of not less than 8 kV.

ii. Paint Coating Thickness

The test should confirm in accordance to clause 15.2.4 of NTDC specification DDS-84-2020 (amended to date). The thickness of the paint coating should not be less than 0.12mm.

TYPE TESTS

i. Cross Cut Adhesion Test

Sample	Two Nos. Transformers in a year against any DISCO purchase order for all rating Distribution Transformers shall be selected at random for this test.
Reference Standard	The test will be performed in accordance to ISO 2409 standards.
Type of Cutting Tool Used:	1-3 mm spacing.

After performing the tests the edges of the cuts should be completely smooth and none of the squares of lattice is detached.

ii. Salt Spray Test

Sample	The test will be performed once in a year against any DISCO purchase order for all rating Distribution Transformers.The test samples of appropriate size following all the above steps of powder coating will be prepared. One of the five No. samples selected randomly will be got tested.
Reference Standard	The test will be performed in accordance to ISP 9227 Standards.
Observation time	500 hours.

After 500 hours salt spray test there should be no corrosion on the sample. There should be no cracks & peelings of the paint.

iii. Impact Test

Samples	This test will be performed twice a year against any purchase order for all rating Distribution Transformers.
Reference	This test will be performed in accordance to ISO 6272.
Standard	The value obtained by the impact test should be greater than 25 kg/cm.

Note:

All the routine/type tests should be witnessed by the Inspection Departments as per inspection criteria.

SCHEDULE OF TECHNICAL DATA

(04 Pages)

PUBLIC PROCUREMENT REGULATORY AUTHORITY (PPRA) EPADS

SCHEDULE OF TECHNICAL DATA
FOR 3 PHASE, 11000/415 VOLTS DISTRIBUTION TRANSFORMERS
NTDC SPECIFICATION DDS:84:2020

1. **Name &address of the manufacturer.** _____
2. **Experience of transformers manufacturing.** _____
3. **Type/Model.** _____
4. **Rated Voltage at no load.**
   a. Higher voltage side. _____
   b. Lower voltage side. _____
5. **Conforming standards.** _____
6. **Rated current.**
   a. Higher voltage side _____
   b. Lower voltage side _____
7. **Rated capacity.** _____
8. **No of phases.** _____
9. **Impedance voltage.** _____
10. **Percentage reactance.** _____
11. **Type of cooling.** _____
12. **Regulating taps(%).** _____
    (Tapping being located on the high voltage winding)
13. **Insulation material & points of applications** _____
14. **Insulating oil** _____
    (Whether it meets the requirement of latest IEC-60422&60296 Class-I Oil)
15. **Insulation level (BIL)** _____
16. **Power frequency test voltage.** _____
17. **Impulse test voltage.**
    a. Full wave _____
    b. Chopped wave _____
18. **Induced voltage with frequency.**
    a. HT winding _____
    b. LT winding _____
19. **Limits of temperature rise for prototype.**
    a. Winding _____
    b. Oil _____
20. **Limits of temperature rise for mass production.**
    a. Winding _____
    b. Oil _____
21. **Short circuit withstand standard** _____
22. **Reference ambient temperature.**
    a. Max. ambient air temperature _____
    b. Max. Daily average ambient temperature _____
    c. Max. Yearly average ambient temperature _____
    d. Altitude _____
23.
    a. **Oil weight** _____
    b. **Core weight** _____

i

e-Pak Acquisition and Disposal System (EPADS) generated document | © 2026

c. **HT winding**
   i. Weight (with insulation) _____
   ii. Size of copper conductor
      Paper insulated/BARE _____
      Height of coil/packet _____
   iii. No. of HT winding packets _____

d. **LT winding**
   i. Weight (with insulation) _____
   ii. Size of copper conductor
      Paper insulated/Enameled _____
      Bare _____
   iii. Outer diameter of coil/packet _____
   iv. Height of coil/packet _____
   v. No. of LT winding packets _____

e. **Liftable weight including weight of winding, weight of core, tap cover, bushings and hardware.** _____

f. **Weight of empty tank (Without top cover and wheel)** _____

g. **Weight of complete transformer** _____

24. **Vector Group** _____

25. **Type test certificate,** if any (also same rating with different losses) _____
   a. Issuing authority _____
   b. S&S, NTDC approval letter No. & Date _____

26. **Losses.**
   a. Total copper losses at 100% rated load _____ Watts
   b. Total iron losses at 100% voltage _____ Watts
   c. Total losses at 100% rated load and 100% voltage _____ Watts
   d. Total losses at 75% rated load and 100% voltage _____ Watts
   e. Total losses at 50% rated load and 100% voltage _____ Watts
   f. Iron losses at no load and 100% voltage _____ Watts
   g. Iron losses at no load and 110% voltage _____ Watts
   h. Copper losses at 100% rated load and 100% voltage _____ Watts

27. **Efficiencies**
   1. **For unit power factor**
      a. At 100% rated load _____ %
      b. At 75% rated load _____ %
      c. At 50% rated load _____ %
   2. **For 0.8 power factor**
      a. At 100% rated load _____ %
      b. At 75% rated load _____ %
      c. At 50% rated load _____ %

e-Pak Acquisition and Disposal System (EPADS) generated document | © 2026

28. Voltage regulation

a. Voltage regulation in percent of the load voltage at full load & at unity power factor _____ %

b. Voltage regulation in percent of no load, full load at 0.9 lagging power factor _____ %

29. Provision of fittings

Whether following fittings for transformer has been provided:-

a. Rating plate _____
b. Terminal marking _____
c. Lifting lugs _____
d. Earthing terminal for tank/ Qty. _____
e. Oil filling hole & plug with sealing arrangement _____
f. Oil level indicator _____
g. Support lugs _____
h. Channels _____
i. HT & LT bushings, Name & Year of manufacture _____
j. Pressure Relief Device (Make and setting) _____
k. Conservator Tank with Silica Gel _____

30. Tank

Attach the copy of the certificate that transformer is effectively sealed from atmosphere _____

a. Whether completely assembled transformer is designed and tested to withstand, without deformation or leakage pressure of 15 lbs/inch^{2}or 5 lbs/inch^2 (for Tubular/Corrugated) _____
b. Whether tank is marked outside with white paint to show min and max level of oil at 30^{0}C. _____
c. To prevent flashover caused by large bird, whether transformer top cover are affectively coated with a weather proof permanent insulating material having a dielectric and withstand voltage at not less than 8kV. _____
d. The tank paint is highly resistant in the effect of storm, sun light and high temperature and shall have a long life under such priming coat and two finish coats, which are applied after the rough clearing of the tank _____
e. Whether thickness of the paint coating is >0.12mm _____
f. Whether bushings and connectors have been provided on transformer as per NTDC drawings _____
g. Whether all nuts and bolts used for the construction of the tank are Galvanized. _____

31. No. of cooling tubes and size. (Attached dimensional drawings) _____

32. Over all dimensions of transformers (L x W x H) _____

33. Tank dimension (inside)

a. Height _____

e-Pak Acquisition and Disposal System (EPADS) generated document | © 2026

b. Width _____
c. Length _____

34. **Whether roller have been fitted with tank** _____
35. **Thickness of tank sheet** _____
36. **Thickness of top cover sheet** _____
37. **Thickness of bottom cover sheet** _____
38. **Total No. of pressure blocks and material** _____
39. **Total No. of tie rods, size & No. of nuts** _____
40. **Total No. of hanging studs, size & No. of nuts** _____
41. **Total No. of core bolts, size & No. of nuts** _____
42. **Whether end rings provided if yes, indicate quantity and dimension and material** _____
43. **Whether tie rods have been covered with insulating sleeves** _____
44. **Any other important information** _____
45. **Whether all points for non entry of moisture have been achieved** _____

e-Pak Acquisition and Disposal System (EPADS) generated document | © 2026

DRAWINGS

(12 Pages)

PUBLIC PROCUREMENT REGULATORY AUTHORITY (PPRA) EPADS

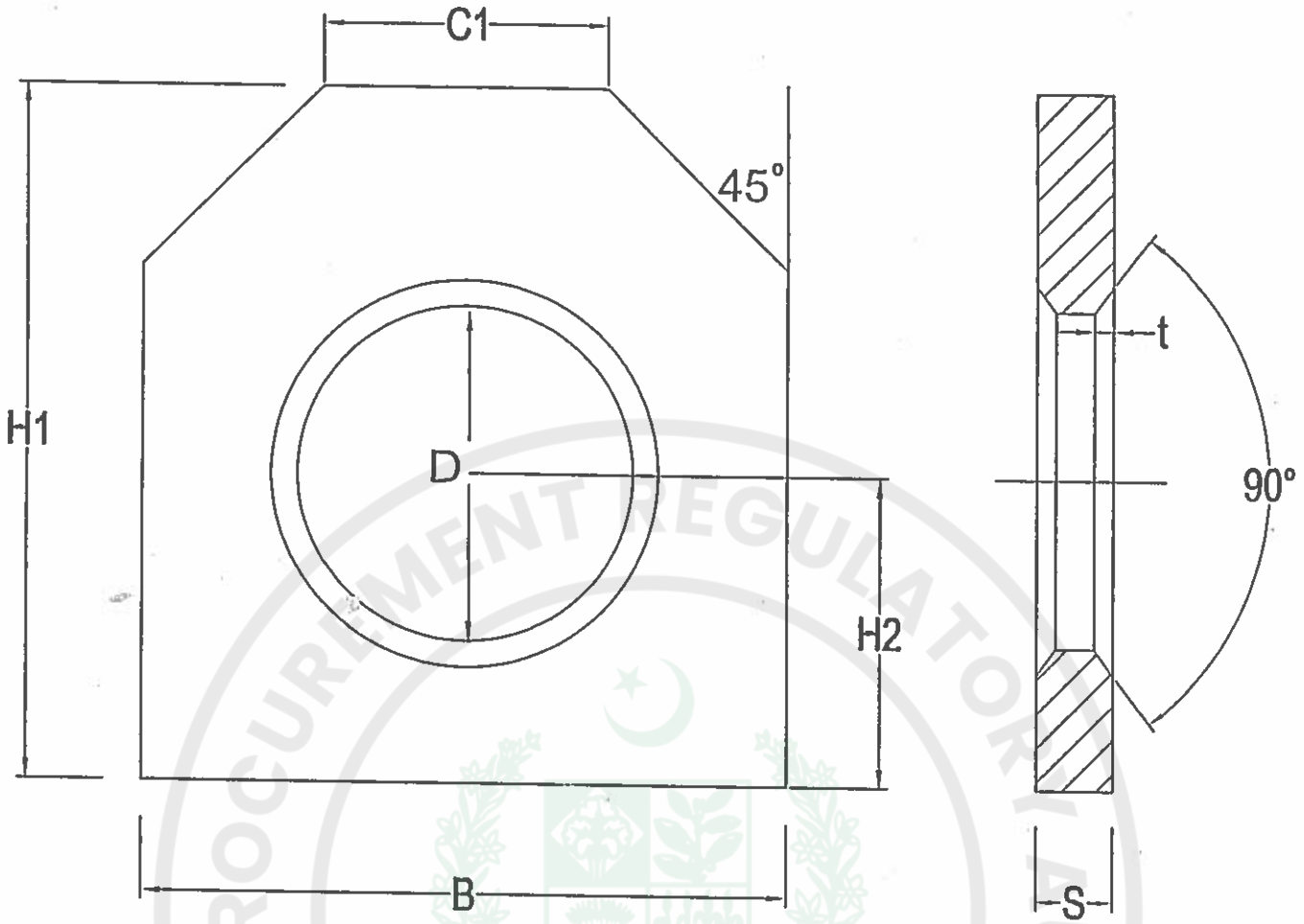

Transformer Capacity	B	D	C1	H1	H2	S	t
5 to 50 kVA	70	40	35	75	35	10	2
100 & 200 kVA	100	55	45	100	45	12	3
315, 400 & 630 kVA	120	65	55	130	60	15	5

MATERIAL: Mild Steel (M.S)

NATIONAL TRANSMISSION AND DESPATCH COMPANY (NTDC)

Specification:	DDS-84:2020 (amended-to-date)	Note:	All Dimensions are in "mm"
Prepared by	Checked by	Verified by	Dated
ENGR. M. HANAN AZAM A.M (S&S)	ENGR. MUBEEN ASGHAR D.M (S&S)	ENGR. AMJAD ALI ADDL. C.E (S&S)	07-12-2020
DRAWING TITLE	Lifting Lugs		
SCALE : NTS	DWG No.: S&S/DTF-LL1	Revision 00	

Approved by:

Engr. Muhammad Bakhsh Mahaar
Chief Engineer (S&S) NTDC

PUBLIC PROCUREMENT REGULATORY AUTHORITY (PPRA) EPADS

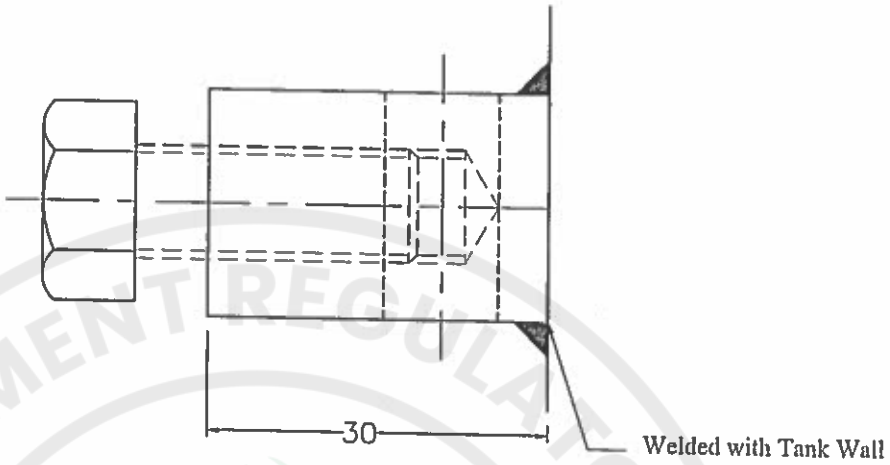

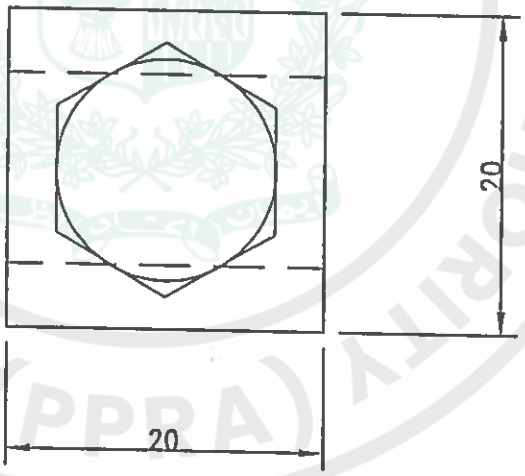

NATIONAL TRANSMISSION AND DESPATCH COMPANY (NTDC)			
Specification: DDS-84:2020 (amended-to-date)		Note: All Dimensions are in "mm"	
Prepared by	Checked by	Verified by	Dated
ENGR. M. HANAN AZAM A.M (S&S)	ENGR. MUBEEN ASGHAR D.M (S&S)	ENGR. AMJAD ALI ADDL. C.E (S&S)	07-12-2020
DRAWING TITLE	EARTHING TERMINAL		
SCALE : NTS	DWG No.: S&S/DTF-ET2	Revision 00	

Approved by:

Engr. Muhammad Bakhsh Mahaar
Chief Engineer (S&S) NTDC

PUBLIC PROCUREMENT REGULATORY AUTHORITY (PPRA) EPADS

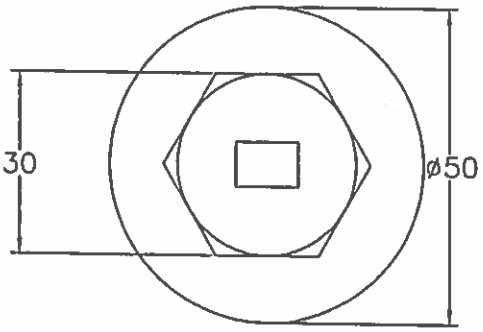

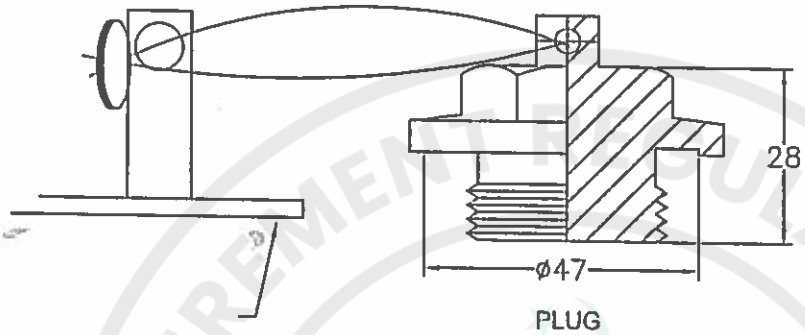

PLUG



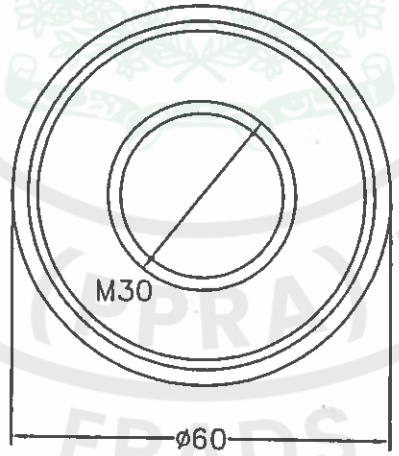

COLLAR

NATIONAL TRANSMISSION AND DESPATCH COMPANY (NTDC)			
Specification: DDS-84:2020 (amended-to-date)		Note: All Dimensions are in "mm"	
Prepared by	Checked by	Verified by	Dated
ENGR. M. HANAN AZAM A.M (S&S)	ENGR. MUBEEN ASGHAR D.M (S&S)	ENGR. AMJAD ALI ADDL. C.E (S&S)	07-12-2020
DRAWING TITLE	OIL FILLING PLUG & COLLAR		
SCALE : NTS	DWG No.: S&S/DTF-OF3	Revision 00	

Approved by:

Engr. Muhammad Bakhsh Mahaar
Chief Engineer (S&S) NTDC

PUBLIC PROCUREMENT REGULATORY AUTHORITY
EPADS

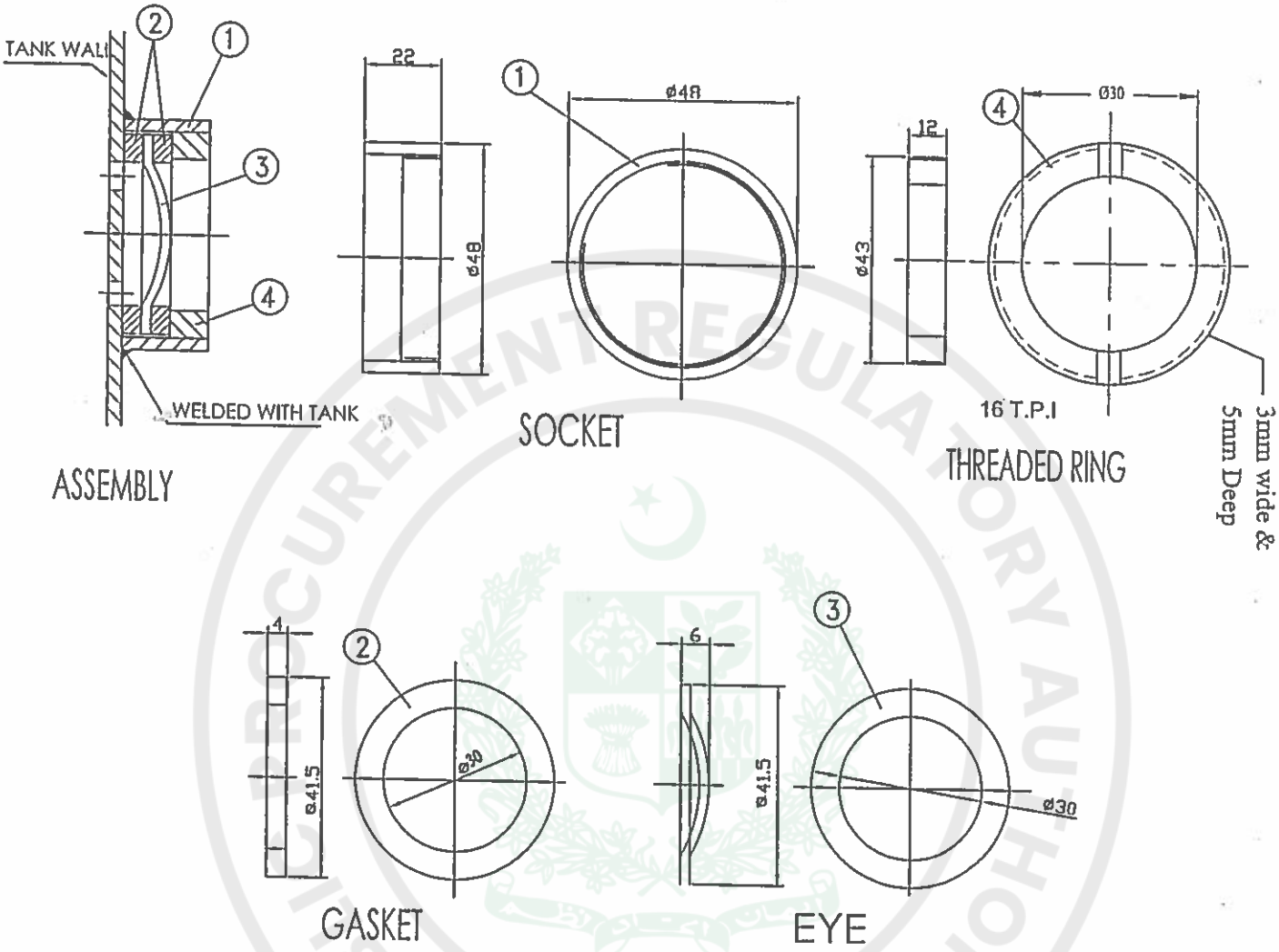

SR NO.#	DESCRIPTION	MATERIAL	QTY (NOS.)
1	SOCKET	M.S	01
2	GASKET	NEOPEREN RUBBER	02
3	EYE	PERSPEX	01
4	THREAD RING	M.S	01

NATIONAL TRANSMISSION AND DESPATCH COMPANY (NTDC)

Specification:	DDS-84:2020 (amended-to-date)	Note:	All Dimensions are in "mm"
Prepared by,	Checked by	Verified by	Dated
ENGR. M. HANAN AZAM A.M (S&S)	ENGR. MUBEEN ASGHAR D.M (S&S)	ENGR. AMJAD ALI ADDL. C.E (S&S)	07-12-2020
DRAWING TITLE	OIL LEVEL INDICATOR		
SCALE : NTS	DWG No.: S&S/DTF-OL4	Revision 00	

Approved by:

Engr. Muhammad Bakhsh Mahaar
Chief Engineer (S&S) NTDC

PUBLIC PROCUREMENT REGULATORY AUTHORITY (PPRA) EPADS

e-Pak Acquisition and Disposal System (EPADS) generated document | © 2026

Support Lug For 25 & 50kVA

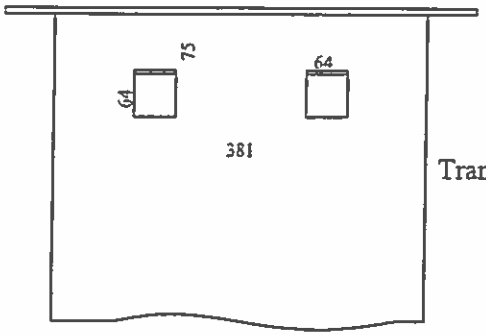

Transformer Tank

Support Lug For 5, 10 & 15 kVA

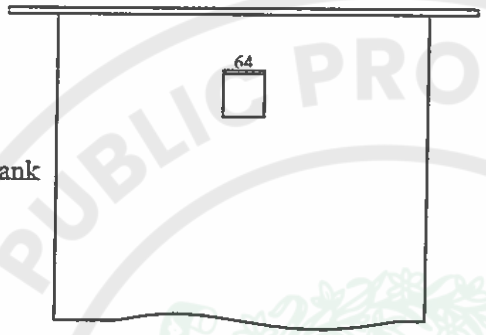

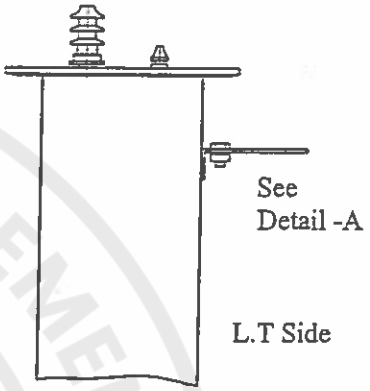

Detail -A

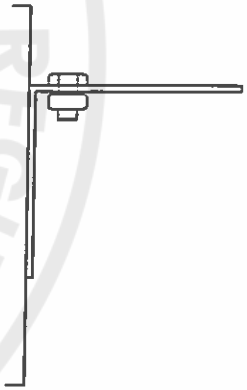

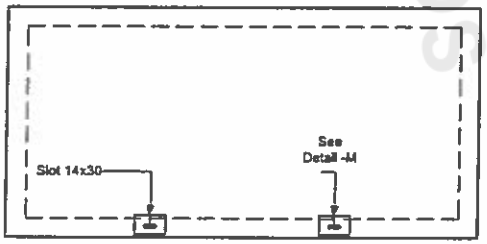



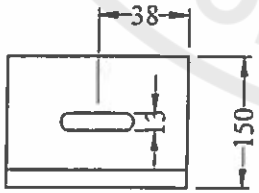

Detail -M

NATIONAL TRANSMISSION AND DESPATCH COMPANY (NTDC)			
Specification: DDS-84:2020 (amended-to-date)		Note: All Dimensions are in "mm"	
Prepared by	Checked by	Verified by	Dated
ENGR. M. HANAN AZAM A.M (S&S)	ENGR. MUBEEN ASGHAR D.M (S&S)	ENGR. AMJAD ALI ADDL. C.E (S&S)	07-12-2020
DRAWING TITLE	Support Lug for 5,10,15,25,50 kVA Distribution Transformers		
SCALE : NTS	DWG No.: S&S/DTF-SL5	Revision 00	

oved by:

Muhammad Bakhsh Mahaar
Engineer (S&S) NTDC

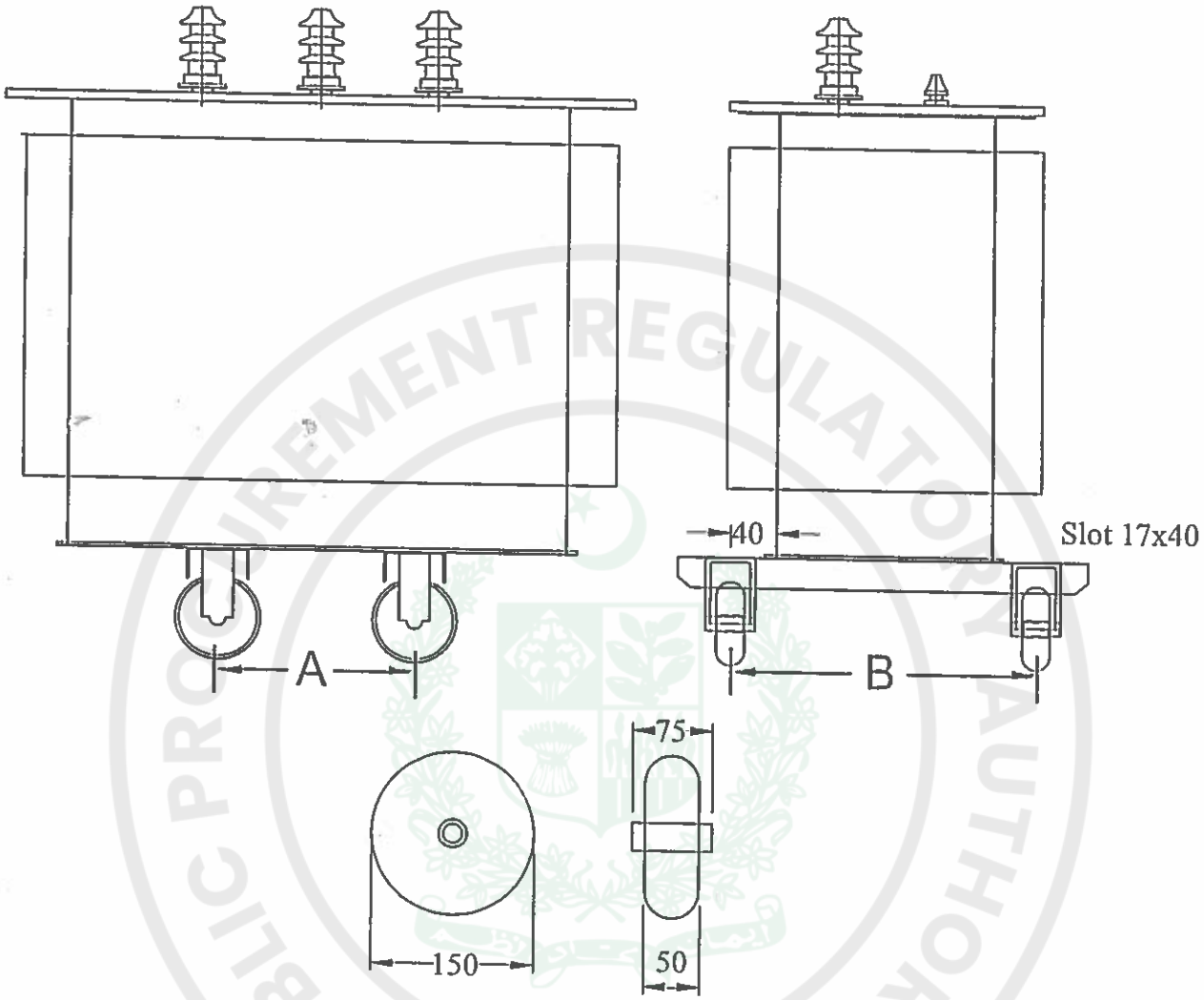

Type	Dimension mm		Channel Size
	A	B	
5,10,15 kVA	350	400	75x37
25,50 kVA	400	500	75x37
100,200 kVA	520	500	100x50
315, 400,630 kVA	670	780	150x75

NATIONAL TRANSMISSION AND DESPATCH COMPANY (NTDC)

Specification:	DDS-84:2020 (amended-to-date)	Note:	All Dimensions are in "mm"
Prepared by	Checked by	Verified by	Dated
ENGR. M. HANAN AZAM A.M (S&S)	ENGR. MUBEEN ASGHAR D.M (S&S)	ENGR. AMJAD ALI ADDL. C.E (S&S)	07-12-2020
DRAWING TITLE	Mounting Arrangement of Distribution Transformers		
SCALE : NTS	DWG No.: S&S/DTF-MA7, S&S/DTF-W6	Revision 00	

Approved by:

Engr. Muhammad Bakhsh Mahaar
Chief Engineer (S&S) NTDC

e-Pak Acquisition and Disposal System (EPADS) generated document | © 2026

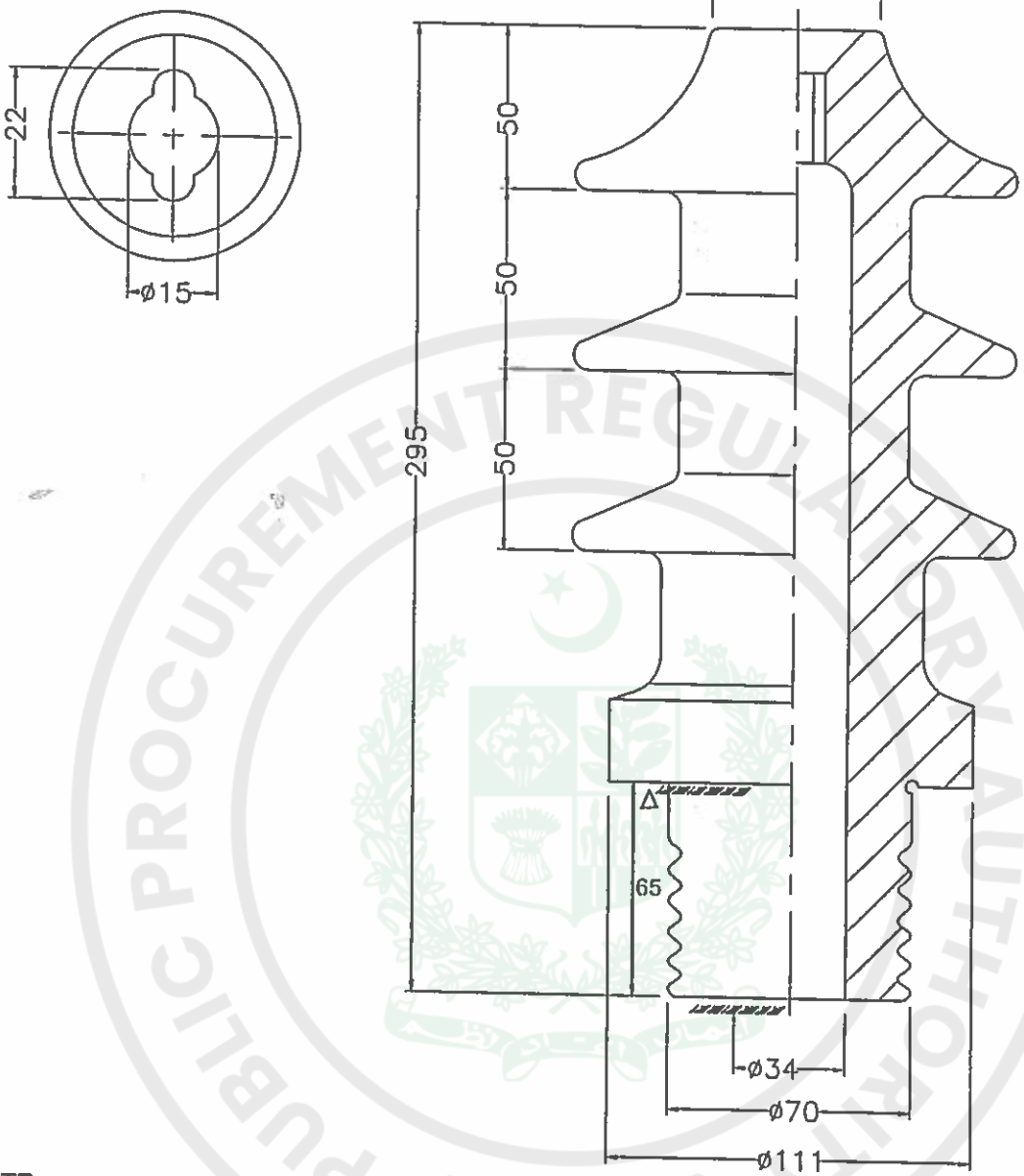

SECTIONAL ELEVATION

NOTE:

1 - - - - - - - - Unglazed Surface
2 Unmarked radii to be Considered as +2.5r
3 Leakage distance 350mm
4 ΔSurface to be ground flat

PUBLIC PROCUREMENT REGULATORY AUTHORITY (PPRA) EPADS

NATIONAL TRANSMISSION AND DESPATCH COMPANY (NTDC)			
Specification: DDS-84:2020 (amended-to-date)		Note: All Dimensions are in "mm"	
Prepared by	Checked by	Verified by	Dated
ENGR. M. HANAN AZAM A.M (S&S)	ENGR. MUBEEN ASGHAR D.M (S&S)	ENGR. AMJAD ALI ADDL. C.E (S&S)	07-12-2020
DRAWING TITLE	HT Bushing for all ratings		
SCALE : NTS	DWG No.: S&S/DTF-HTB1	Revision 00	

Approved by:

Engr. Muhammad Bakhsh Mahaar
Chief Engineer (S&S) NTDC

e-Pak Acquisition and Disposal System (EPADS) generated document | © 2026

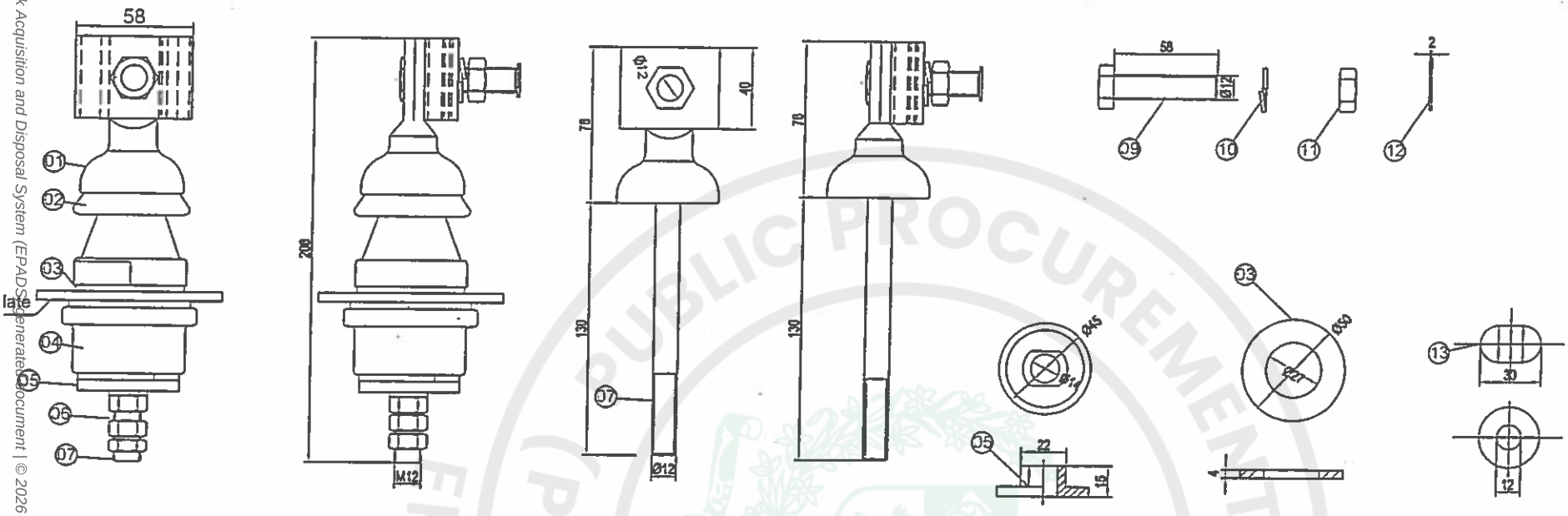

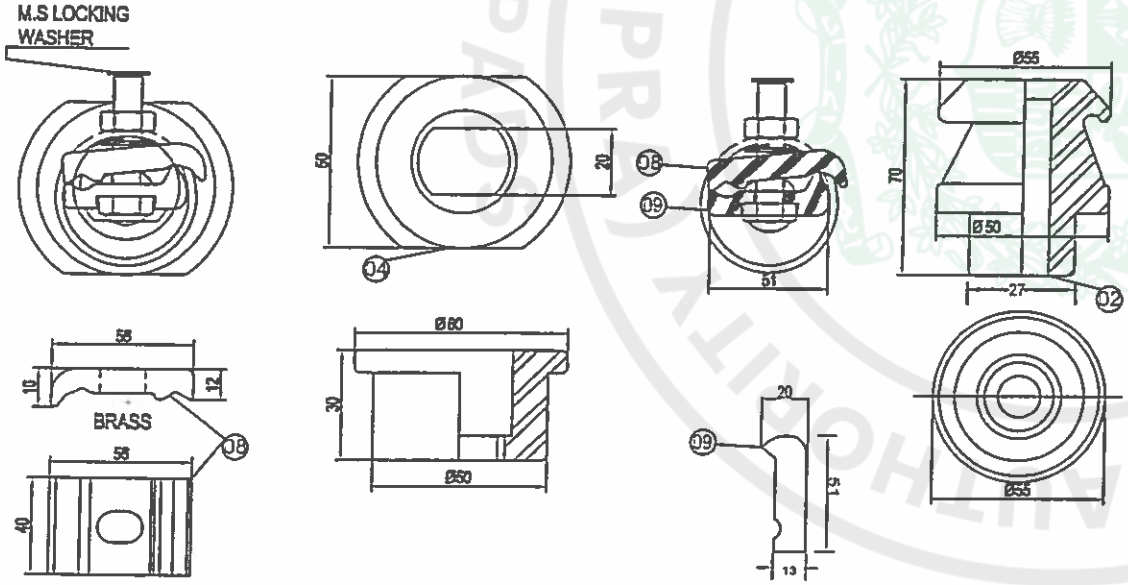

SR NO.#	DESCRIPTION	MATERIAL	QTY (NOS.)
1	PALM TYPE CONNECTOR	BRASS	01
2	BUSHING UPPER PART	PORCELAIN	01
3	GASKET	N.B.R	03
4	BUSHING LOWER PART	PORCELAIN	01
5	FLANGE RING	BRASS	01
6	HEX. HEAD NUT M12	BRASS	03
7	ROD	BRASS	01
8	CLAMP	BRASS	01
9	HEX. HEAD NUT M12	S.S	01
10	SPRING WASHER M12	S.S	01
11	HEX. HEAD BOLT M12	S.S	01
12	LOCK WASHER	M.S	01
13	SEALING WASHER	SYN. RUBBER	01

NATIONAL TRANSMISSION AND DESPATCH COMPANY (NTDC)

Specification:	DDS-84:2020 (amended-to-date)	Note:	All Dimensions are in "mm"
Prepared by	Checked by	Verified by	Dated
ENGR. M. HANAN AZAM A.M (S&S)	ENGR. MUBEEN ASGHAR D.M (S&S)	ENGR. AMJAD ALI ADDL. C.E (S&S)	07-12-2020
DRAWING TITLE	LT Bushing for 5 to100 kVA ratings		
SCALE : NTS	DWG No.: S&S/DTF-LTB200	Revision 00	

oved by:

Muhammad Bakhsh Mahaar
Engineer (S&S) NTDC

e-Pak Acquisition and Disposal System (EPADS) generated document | © 2026

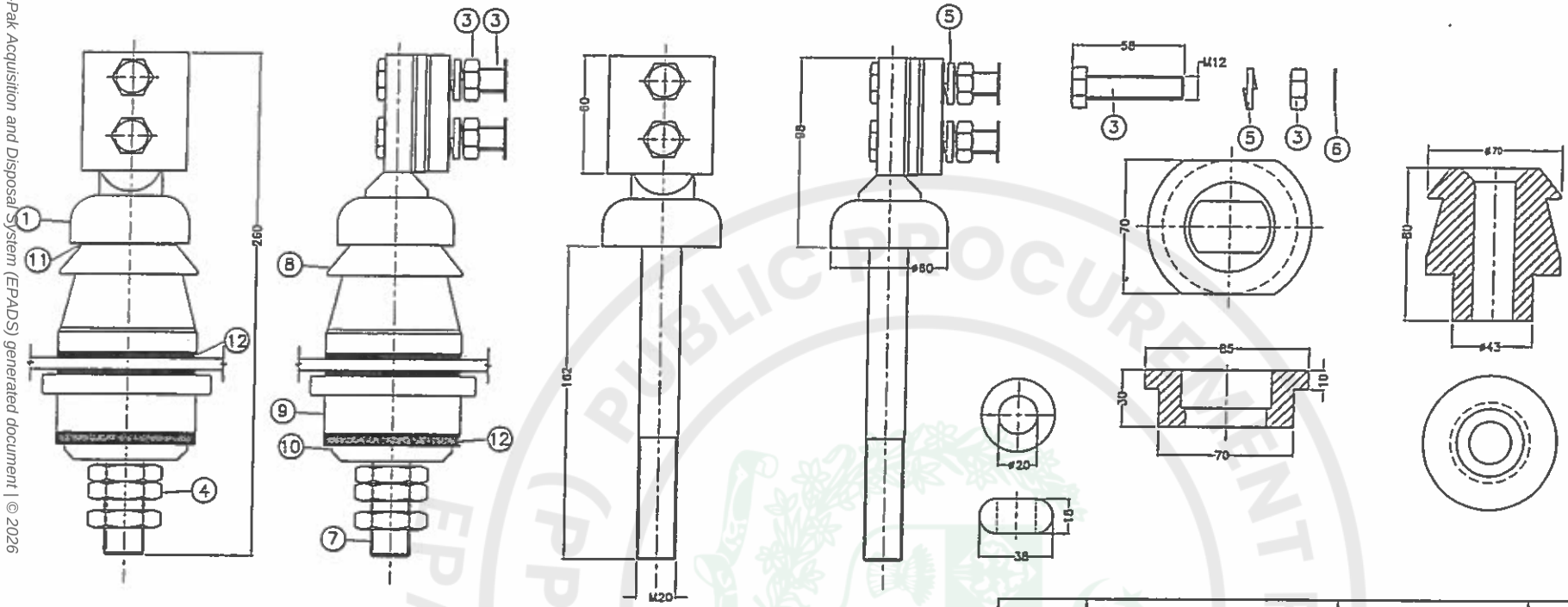

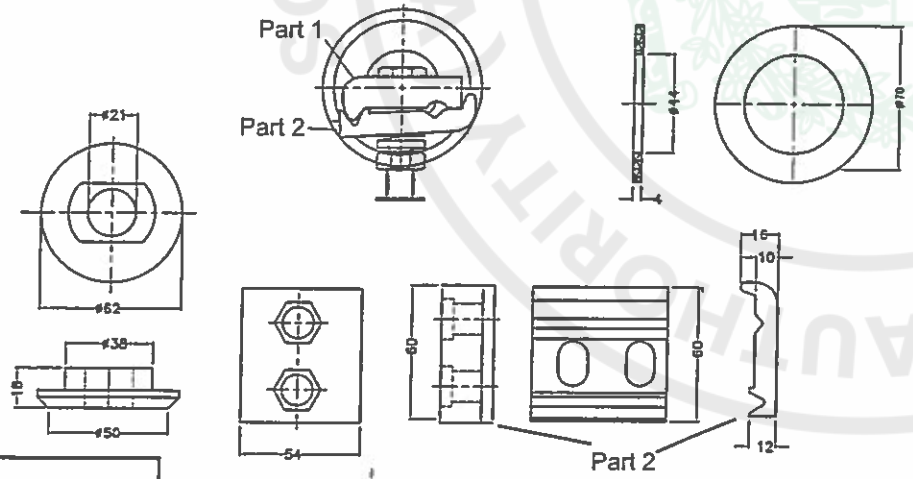

SR NO.#	DESCRIPTION	MATERIAL	QTY (NOS.)
1	PALM TYPE CONNECTOR	BRASS	1
2	CLAMP	BRASS	1
3	HEX NUT & BOLT M12	S.S	1
4	HEX NUT & BOLT M20	BRASS	3
5	SPRING WASHER	S.S	2
6	LOCK WASHER	M.S	2
7	ROD	BRASS	1
8	BUSHING UPPER PART	PORCELAIN	1
9	BUSHING LOWER PART	PORCELAIN	1
10	FLANGE RING	BRASS	1
11	SEALING WASHER	SYN. RUBBER	1
12	GASKET	N.B.R	3

NATIONAL TRANSMISSION AND DESPATCH COMPANY (NTDC)

Specification:	DDS-84:2020 (amended-to-date)	Note:	All Dimensions are in "mm"
Prepared by	Checked by	Verified by	Dated
ENGR. M.HANAN AZAM A.M (S&S)	ENGR. MUBEEN ASGHAR D.M (S&S)	ENGR. AMJAD ALI ADDL. C.E (S&S)	07-12-2020
DRAWING TITLE	LT BUSHING 200KVA		
SCALE : NTS	DWG No.: S&S/DTF-LTB600/1	Revision 00	

Approved by:
Muhammad Bakhsh Mahaar
Engineer (S&S) NTDC

e-Pak Acquisition and Disposal System (EPADS) generated document | © 2026

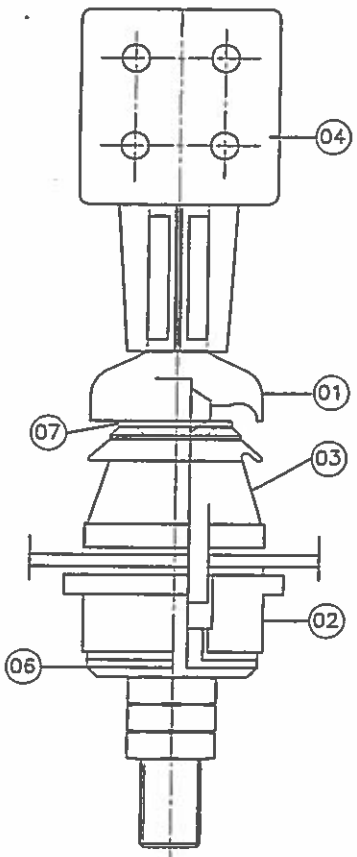

ASSEMBLY

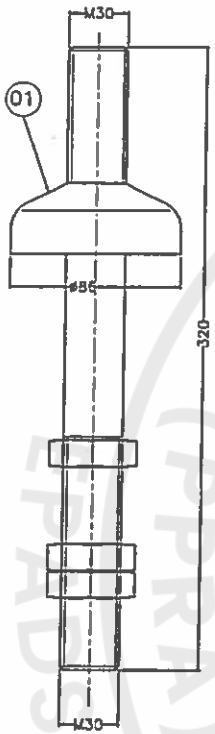

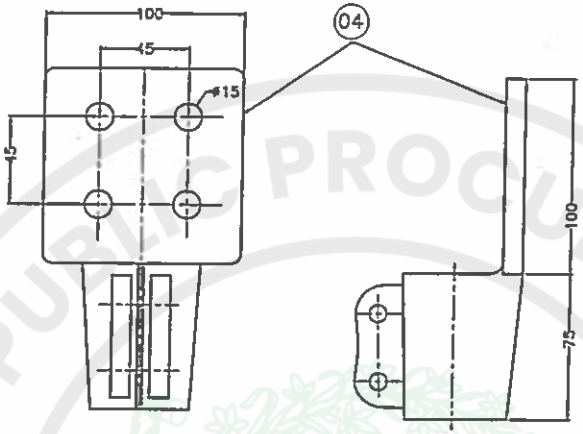

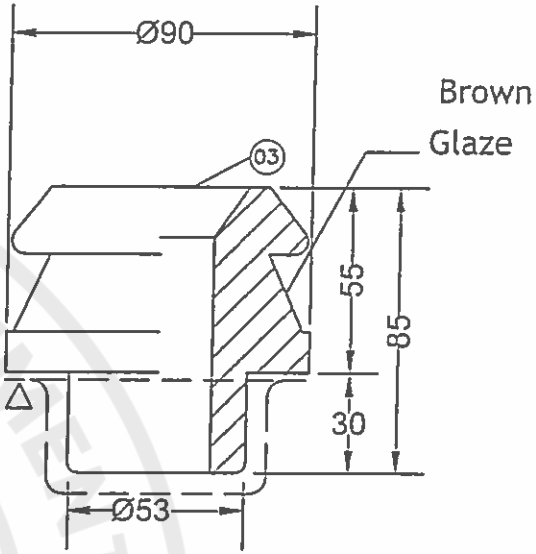

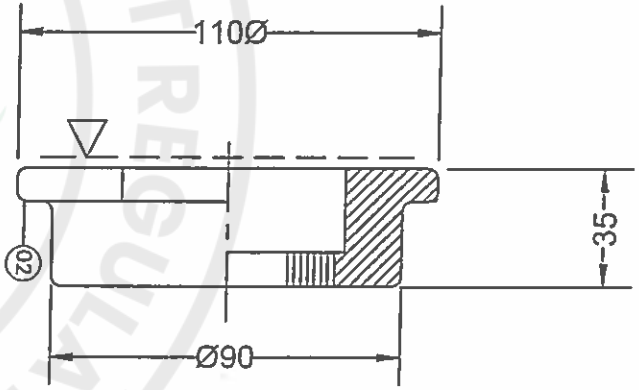

SECTIONAL ELEVATION

1- —Unglazed Surface.
2- Surface Marked ▼ to be ground.

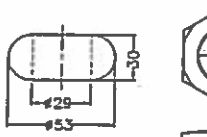

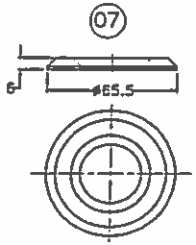

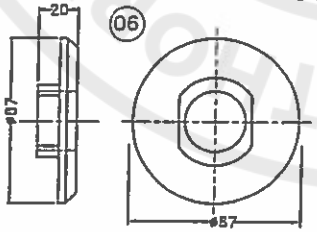

NATIONAL TRANSMISSION AND DESPATCH COMPANY (NTDC)			
Specification: DDS-84:2020 (amended-to-date)		Note: All Dimensions are in "mm"	
Prepared by	Checked by	Verified by	Dated
ENGR. M. HANAN AZAM A.M (S&S)	ENGR. MUBEEN ASGHAR D.M (S&S)	ENGR. AMJAD ALI ADDL. C.E (S&S)	07-12-2020
DRAWING TITLE	LT Bushing for 315, 400 kVA transformers		
SCALE : NTS	DWG No.: S&S/DTF-LTB1000	Revision 00	

Approved by:
Muhammad Bakhsh Mahaar
Engineer (S&S) NTDC

e-Pak Acquisition and Disposal System (EPADS) generated document | © 2026

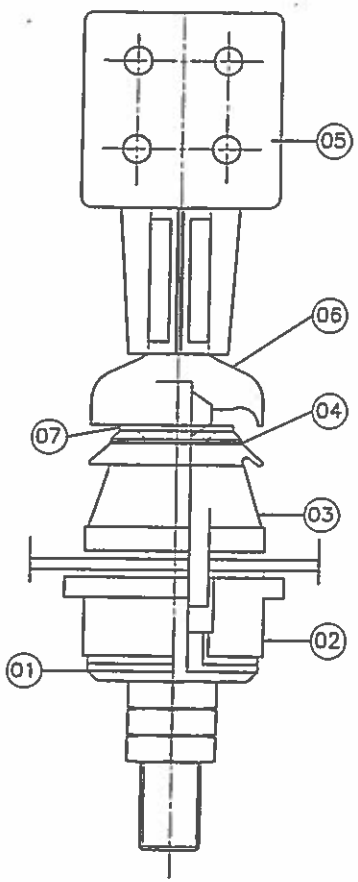

ASSEMBLY

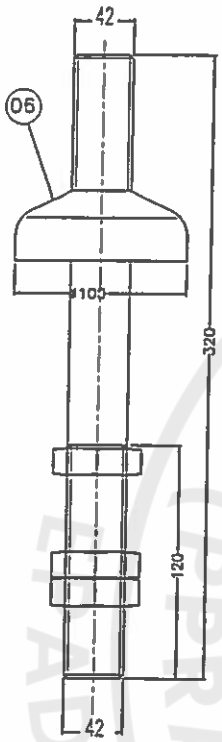

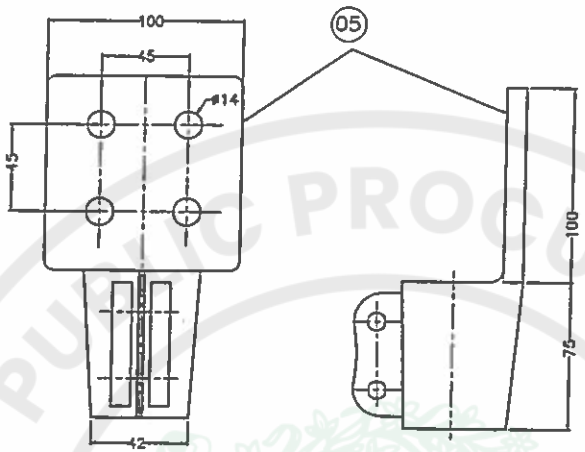

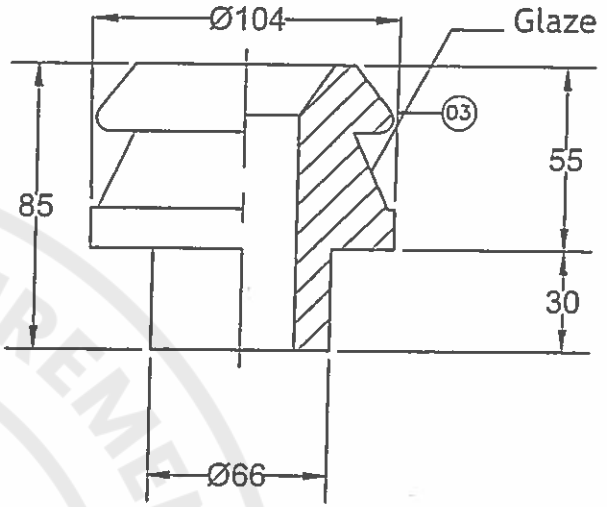

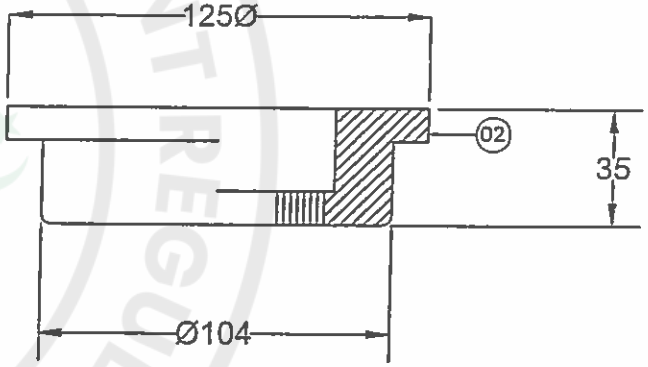

SECTIONAL ELEVATION

1- —Unglazed Surface.

2- Surface Marked ▾ to be ground not mentioned

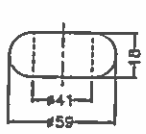

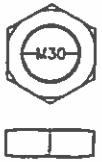

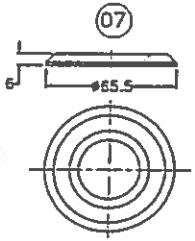

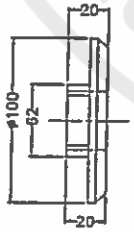

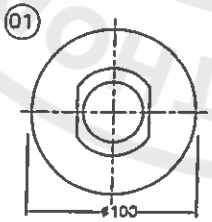

NATIONAL TRANSMISSION AND DESPATCH COMPANY (NTDC)			
Specification: DDS-84:2020 (amended-to-date)		Note: All Dimensions are in "mm"	
Prepared by	Checked by	Verified by	Dated
ENGR. M. HANAN AZAM A.M (S&S)	ENGR. MUBEEN ASGHAR D.M (S&S)	ENGR. AMJAD ALI ADDL. C.E (S&S)	07-12-2020
DRAWING TITLE	LT Bushing for 630 kVA transformers		
SCALE : NTS	DWG No.: S&S/DTF-LTB2000	Revision 00	

Approved by:

Muhammad Bakhsh Mahaar
Chief Engineer (S&S) NTDC

e-Pak Acquisition and Disposal System (EPADS) generated document | © 2026

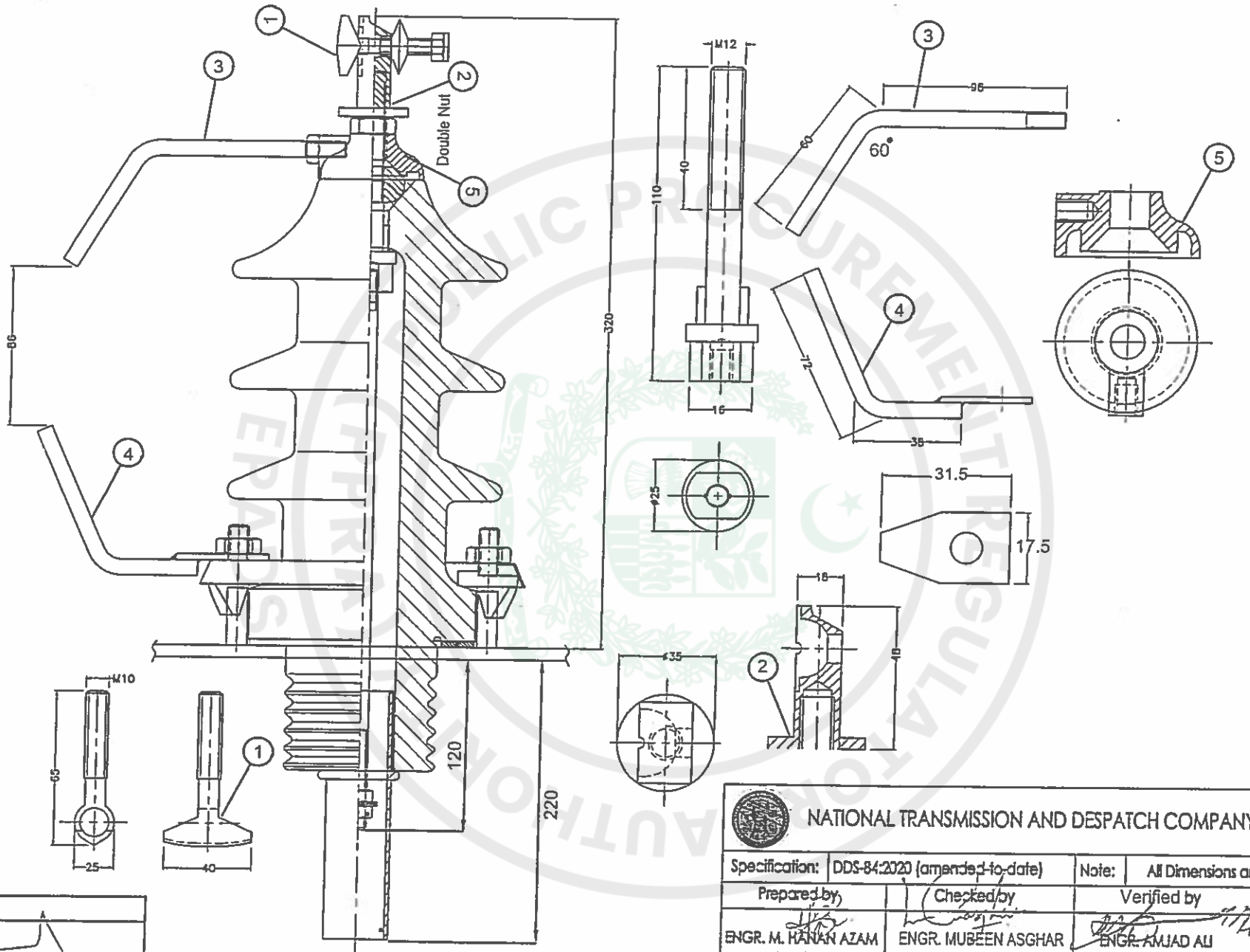

NATIONAL TRANSMISSION AND DESPATCH COMPANY (NTDC)			
Specification: DDS-84:2020 (amended-to-date)		Note: All Dimensions are in "mm"	
Prepared by	Checked by	Verified by	Dated
ENGR. M. HANAN AZAM A.M (S&S)	ENGR. MUBEEN ASGHAR D.M (S&S)	ENGR. AMJAD ALI ADDL. C.E (S&S)	07-12-2020
DRAWING TITLE	HT Bushing for all ratings		
SCALE : NTS	DWG No.: S&S/DTF-HT2	Revision 00	

roved by:

. Muhammad Bakhsh Mahaar
F Engineer (S&S) NTDC

NATIONAL TRANSMISSION & DESPATCH COMPANY LIMITED
CHIEF ENGINEER (STANDARDS & SPECIFICATIONS) NTDC

No. CE/S&S/NTDC/ Z-248/4857-91 Date: 14-11-2022

The Chief Executive Officers,
All DISCOs IESCO

All Distribution Transformer Manufacturers,
M/s _____

CE(MM), CE(TSW)

Subject: - AMENDMENT NO. 01 IN NTDC SPECIFICATION DDS-84:2020 FOR OIL IMMERSED DISTRIBUTION TRANSFORMERS (11/ 0.415 kV)

Enclosed please find herewith a copy of Amendment No. 01 in the NTDC Specification DDS-84:2020 for Oil Immersed Distribution Transformers (11/ 0.415 kV) for your information, record and implementation duly approved by "Dr. Rana Abdul Jabbar Khan, Managing Director NTDC". The same shall be applicable from the issuance of this letter.

DA/As above

14/11/2022

(ENGR. MUHAMMAD JAHANGIR MALIK)
CHIEF ENGINEER (S&S) NTDC

Cc to: -

1. Deputy Managing Director (P&E), NTDC, 419-WAPDA House Lahore
2. General Manager (D&E) NTDC, 154-WAPDA House, Lahore
3. General Manager (Technical), NTDC, WADPDA House, Lahore
4. General Manager (TS) PPMC, Room 112 Evacuee Trust Complex, Agha Khan Road, Islamabad
5. All Specification Review Committee Members.
6. The Chief Engineer (MI) PPMC, 5th Floor, WAPDA House, Lahore.
7. Manager HSEQ Cell, PEPCO, 189-WAPDA House, Lahore.
8. PS to MD NTDC, 414-WAPDA House, Lahore.
- Master File

Director MM
18/11/22

8395
DATE 18-11-22

e-Pak Acquisition and Disposal System (EPADS) generated document | © 2026
CamScanner

NTDC Specification DDS-84: 2020

Oil Immersed Distribution Transformers (11/ 0.415 kV)

Amendment No. 01 Dated: 12-09-2022

Change of the Name of Specification:

Oil Immersed Distribution Transformers (11/ 0.415 kV)

Amended clauses 15.2.1 (i) and (ii):

(i) A completely assembled Tubular Tank transformer shall have enough space/ air gap of 45 mm (min.) between the oil level to the bottom of the top plate under ambient conditions for the oil expansion.

The tank shall be tested to withstand the pressure of 15 lbs/in^2 (psi) for 30 minutes without any deformation or leakage. The tank design (except PMT) shall be such that the core and windings can be lifted freely.

(ii) A completely assembled Corrugated Tank transformer shall have enough space/ air gap of 45 mm (min.) between the oil level to the bottom of the top plate under ambient conditions for the oil expansion.

The tank shall be tested to withstand the pressure of 5 lbs/in^2 (psi) for 30 minutes without any deformation or leakage. The tank design (except PMT) shall be such that the core and windings can be lifted freely.

Add following clauses under clause 15.2.2

(c) **Welding of Tubular and Corrugated Tanks:**

The transformer tank shall be of adequate mechanical strength to withstand positive and negative pressures built up inside the tank as mentioned above in clause 15.2.1 (i) and (ii) while the transformer is in operation. Welding should be strong, smooth and uniform in every aspect.

The manufacturers shall develop and retain the Welding Procedure Specification (WPS) and Welding Performance Qualification (WPQ) Criteria in accordance with relevant guidelines of American Society of Mechanical Engineers (ASME)/ American Society Code for Welding of Structural Steel (AWS D1.1)/ ISO Standards or any other equivalent National or International Standard(s) for the welding of Tanks to follow the welding norms as mentioned in the figures (a) & (b).

e-Pak Acquisition and Disposal System (EPADS) generated document | © 2026

CamScanner

(d) Welding Techniques, Operations and Quality Control:

i)- Manufacturers shall carry out all welding operations by using appropriate/ suitable techniques in accordance with the relevant guidelines of ASME/ AWS (AWS D1.1)/ ISO or any other equivalent National/ International Standards for the welding of Tanks.

ii)- All the welding operations shall be carried out by the certified Welders and quality control to be ensured by the Welding Inspectors.

iii)- The Welders and Welding Inspectors shall be certified from any reputed Technical Training Institute registered with National/ Provincial Government Technical Authorities. Furthermore, for the internal trainings and certifications of the Welders and Welding Inspectors, *a certified Human Resource having minimum qualification of DAE Metallurgical/ Mechanical/ Electrical with 5-years of experience in relevant field is mandatory, who will assess the training needs according to the Skill Development Matrix.*

iv)- Manufacturer shall retain the training records/ certificates of Welders and Welding Inspectors.

The Chief Engineer (Material Inspection) PPMC shall keep adequate checks on the fabrication of transformer tanks during the *Stage Inspection and Mass Production* regarding acceptance/ rejection.

(e) Welding Thickness of T-Joints between Transformer Tank and Bottom Sheet:

(i) Tubular Tank:

A tubular tank having the thickness of

Tank sheet = 3.0 mm

Bottom sheet = 4.0 mm

the minimum T-Fillet weld size shall be as below (fig. a)

Throat Size = 4.0 mm *or*

Leg Length Size = 5.0 mm

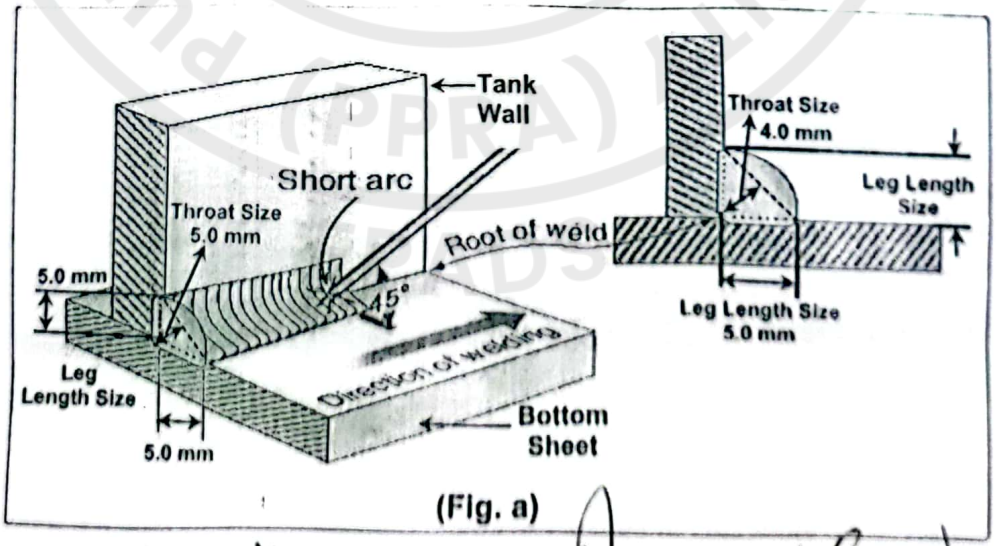

(Fig. a)

e-Pak Acquisition and Disposal System (EPADS) generated document | © 2026
CamScanner

(ii) Corrugated Tank:

(a)- Minimum weld size at the edge of bended Bottom sheet with the End sheets will be as below (fig. b).

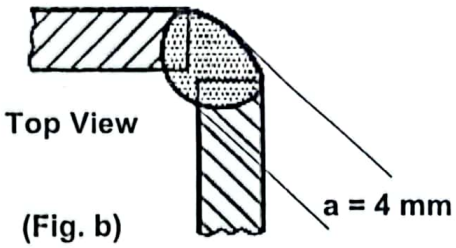

(Fig. b)

(b)- Lap joints of all cold rolled sheets with tank frame and bottom sheet will be executed with MIG welding technology and should be uniform in all aspects.

SCHEDULE OF TECHNICAL DATA

Amended Clause-30 (a)

30. Tank

a. Whether a completely assembled transformer is so designed and tested to withstand the pressure of 15 lbs/in^2 (psi) for Tubular Tank for 30 minutes and 5 lbs/in^2 (psi) for Corrugated Tank for 30 minutes without any deformation or leakage and have minimum air gap of 45 mm above the oil level. _____

Add clause (h)

h. Whether, the tank is so designed (except PMT) that the core and windings can be lifted freely _____

Add Clause-46

46- Welding Thickness of T-Joints between Transformer Tank and Bottom Sheet:

(i) Tubular Tank:

The tubular tank having thickness of Tank sheet= 3.0 mm and Bottom sheet = 4.0 mm, the minimum T-Fillet weld size will be

Throat Size = _____ mm *or*

Leg Length Size = _____ mm

e-Pak Acquisition and Disposal System (EPADS) generated document | © 2026
CamScanner

(ii) Corrugated Tank:

(a)- Minimum weld size at the edge of bended Bottom sheet with the End sheets will be a = _____ mm

(b)- Lap joints of all cold rolled sheets with Tank Frame and Bottom Sheet will be executed with MIG welding technology and uniform in all aspects _____.

Prepared by:

Engr. Tanveer Ahmad Assistant Manager (Distribution Engineering)	**Engr. Shoaib Khan** Deputy Manager (Distribution Engineering)

Checked by:

Engr. Khalid Mehmood Addl. Chief Engineer (Design & Standards)	**Engr. Muhammad Amir Hamid** Manager (Distribution Engineering)	**Engr. Ashfaq Ahmad** Manager (Distribution Planning)

Recommended by Specification Review Committee:

Engr. Muhammad Jahangir Malik Chief Engineer (Standards & Specifications) NTDC Secretary SRC	**Engr. Muhammad Shoaib** Chief Engineer (C&M) NTDC Member SRC	**Engr. Taqi-ud-Din** Chief Engineer (Protection & Control) NTDC Member SRC
Engr. Farooq Rasheed Chief Engineer (Power System Planning) NTDC Member SRC	**Engr. Anwar Ahmad Khan** General Manager (Assets Management) NTDC Member SRC	15/9/2022 **Engr. Dr. Khawaja Riffat Hassan** **General Manager** (Design & Engineering) NTDC Convener SRC

e-Pak Acquisition and Disposal System (EPADS) generated document | © 2026
CamScanner

SPECIFICATION NO. DDS-84:2007

OIL IMMERSED HERMETICALLY SEALED TYPE

DISTRIBUTION TRANSFORMERS

11/0.415 KV

AMENDMENT NO. 5

DATED 3rd. JUNE, 2010.

I. Replace the existing clause 16.5, as follow:

16.5. Core and Winding losses.

The maximum allowable losses at rated Voltage and rated Frequency permitted at 75 °C for 11/0.415 KV Distribution Transformers is given in the table below:-

KVA Rating	5	10	15	25	50	100	200	400	630
Iron losses (W)	44	52	68	98	140	248	396	740	1080
Copper Losses (W)	140	256	348	512	936	1616	2728	4480	6520

3124

16.5.1 Capitalization (Evaluation)

The above losses are maximum allowable and there would be no positive tolerance. Bids with higher losses than the above specified values would be treated as non-responsive. However, the manufacturer can offer losses less than above specified values. The purchaser will evaluate offers with losses lower than the maximum allowable losses on Total Owning Cost (TOC) basis in accordance with the formula given below:

TOC = Quoted price + (K1 x Iron Losses) + (K2 x Copper Losses)

Where:

Iron Losses (K1) : Rs.2,99,948 Per Kw

Copper Losses (K2) : Rs.145,299 Per Kw

1. No tolerance is allowed on the guaranteed losses declared by the manufacturer in the bid for both, prototype and mass production.
2. A penalty at four time the rate of the capitalized cost of no load and load losses indicated above shall be payable by the supplier for the losses in excess of the guaranteed values up to 10% for acceptance of lot. For losses exceeding by 10%, than the offered Transformer (s) lot will be rejected.

CE-BF
a) Pl note it.
b) Circulate it to all CEs, S.Es & Directors.

e-Pak Acquisition and Disposal System (EPADS) generated document | © 2026

CamScanner

Price Schedule Forms

Name of Bidder: _____

Tender No. & date of opening	Description of Material	Losses		Tender Qty (Nos)	Rate in Rs. Per unit on FCS basis excluding GST and without involving any foreign exchange.	Total Amount (full quantity) w/o GST [(d)x(e)]	Rate in Rs. Per unit on FCS basis including GST and without involving any foreign exchange	Amount of 18% GST (full quantity) [(18%) x (f)]	Total Amount (full quantity) with GST [(f)+(h)]	Delivery Schedule From the date of issuance of P. O
		Iron (watt)	Copper (watt)							
(a)	(b)	(c)		(d)	(e)	(f)	(g)	(h)	(i)	(j)
99 11.12.26	630 KVA Pole Mounted Distribution Transformer									*"Full quantity within 60 days from the date of issuance of PO."*

Note: The Prices quoted by the bidder on the E-PADS Price Module shall be deemed inclusive of all applicable taxes, duties, and other statutory charges. In case of any ambiguity caused by not quoting the prices so required by bidder, the bid will be marked as abnormal and rejected.

Amount of Bid Bond: _____.

Bid Security validity: _____.

Model/Make of Equipment: _____.

Issuing Authority: _____.

Note: In case of discrepancy between unit price and total, the Unit Price shall prevail.

Stamp & Signature of Bidder

Past Experience / Contracts

Contracts over *[insert amount]* during the last three years:				
Procuring Agency	Value	Year	Goods/Services Supplied	Country of Destination

PUBLIC PROCUREMENT REGULATORY AUTHORITY (PPRA) EPADS

Historical Contract Non-Performance, and Pending Litigation and Litigation History

[The following table shall be filled in for the Applicant and for each member of a Joint Venture]

Applicant's Name: *[insert full name]*
Date: *[insert day, month, year]*
Joint Venture Member Name: *[insert full name]*
IFP No. and title: *[insert IFP number and title]*
Page *[insert page number]* of *[insert total number]* pages

☐ Not debarred due to deviation from commitment of Bid Securing Declaration-☐ Not debarred due to non-performance			
Year	**Non-performed portion of contract**	**Contract Identification**	**Total Contract Amount (current value, currency, exchange rate and PKR equivalent)**
[insert year]	*[insert amount and percentage]*	Contract Identification: *[indicate complete contract name/ number, and any other identification]* Name of Procuring Agency: *[insert full name]* Address of Procuring Agency: *[insert street/city/country]* Reason(s) for nonperformance: *[indicate main reason(s)]*	*[insert amount]*
Pending Litigation, in accordance with Section III, Qualification Criteria and Requirements			
☐ Pending litigation in accordance with Section III, Qualification Criteria and Requirements, Sub-Factor 2.3 as indicated below.			

Year of dispute	**Amount in dispute (currency)**	**Contract Identification**	**Total Contract Amount (currency), ~~US$~~ PKR Equivalent (exchange rate)**

[insert year]	*[insert amount]*	Contract Identification: [indicate complete contract name, number, and any other identification] Name of Procuring Agency: *[insert full name]* Address of Procuring Agency: *[insert street/city/country]* Matter in dispute: *[indicate main issues in dispute]* Party who initiated the dispute: *[indicate "Procuring Agency" or "Supplier"]* Status of dispute: *[Indicate if it is being treated by the Adjudicator, under Arbitration or being dealt with by the Judiciary]*	*[insert amount]*

☐ No consistent history of court/arbitral award decisions in accordance with Section III, Qualification Criteria and Requirements, Sub-Factor 2.4.

☐ Consistent history of court/arbitral award decisions in accordance with Section III, Qualification Criteria and Requirements, Sub-Factor 2.4 as indicated below.

Year of award	**Outcome as percentage of Net Worth**	**Contract Identification**	**Total Contract Amount (currency), PKR Equivalent (exchange rate)**
[insert year]	*[insert percentage]*	Contract Identification: [indicate complete contract name, number, and any other identification] Name of Procuring Agency: *[insert full name]* Address of Procuring Agency: *[insert street/city/country]* Matter in dispute: *[indicate main issues in dispute]* Party who initiated the dispute: *[indicate "Procuring Agency" or "Supplier"]* Court/ arbitral award decision: *[Indicate if the award decision was against the Applicant or any member of a joint venture.]y]*	*[insert amount]*

Current Contract Commitments / Works in Progress

Bidders and each member to a JV should provide information on their current commitments on all contracts that have been awarded, or for which a letter of intent or acceptance has been received, or for contracts approaching completion, but for which an unqualified, full completion certificate has yet to be issued.

Current Contract Commitments					
No.	Name of Contract	**Employer's Contact Address, Tel, Fax**	**Value of Outstanding Work [Current Eq. PKR]**	**Estimated Completion Date**	**Average Monthly Invoicing Over Last Six Months [Eq. PKR/month)]**
1					
2					
3					
4					
5					

Financial Situation and Performance

[The following table shall be filled in for the Applicant and for each member of a Joint Venture]

Applicant's Name: *[insert full name]*
Date: *[insert day, month, year]*
Joint Venture Member Name: *[insert full name]*
IFP No. and title: *[insert IFP number and title]*
Page *[insert page number]* of *[insert total number]* pages

1. Financial data

Type of Financial information in (currency)	**Historic information for previous _[insert number] years, [insert in words] (amount in currency, currency, exchange rate*, PKR equivalent)**				
	Year 1	Year 2	Year 3		
Statement of Financial Position (Information from Balance Sheet)					
Total Assets (TA)					
Total Liabilities (TL)					
Total Equity/Net Worth (NW)					
Current Assets (CA)					
Current Liabilities (CL)					
Working Capital (WC)					
Information from Income Statement					
Total Revenue (TR)					
Profits Before Taxes (PBT)					
Cash Flow Information					
Cash Flow from Operating Activities					

* Refer ITA 14 for the exchange rate

3. Financial documents

The Applicant and in case of JV, members of JV shall provide copies of financial statements for *[number]* years pursuant Section III, Qualifications Criteria and Requirements. The financial statements shall:

(a) reflect the financial situation of the Applicant or in case of JV member, and not an affiliated entity (such as parent company or group member).

(b) be independently audited or certified in accordance with local legislation.

(c) be complete, including all notes to the financial statements.

(d) correspond to accounting periods already completed and audited.

☐ Attached are copies of financial statements[1] for the *[number]* years required above; and complying with the requirements.

[1] If the most recent set of financial statements is for a period earlier than 12 months from the date of Application, the reason for this should be justified.

Average Annual Turnover (Annual Sales Value)

[The following table shall be filled in for the Applicant and for each member of a Joint Venture]

Applicant's Name: *[insert full name]*
Date: *[insert day, month, year]*
Joint Venture Member Name: *[insert full name]*
IFP No. and title: *[insert IFP number and title]*
Page *[insert page number]* of *[insert total number]* pages

Annual Turnover Data			
Year	**Amount** **Currency**	**Exchange rate*** **(If applicable)**	**PKR equivalent**
[indicate calendar year]	*[insert amount and indicate currency]*		
		Average Annual Turnover **	

* Refer ITA for date and source of exchange rate.

** Total PKR equivalent for all years divided by the total number of years. See Section III, Qualification Criteria and Requirements, ITA.